YAMAHA

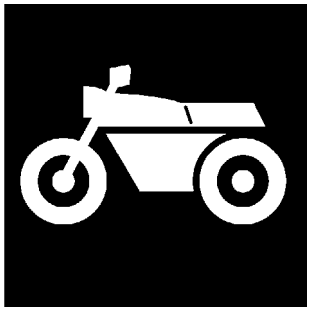

PARTS CATALOGUE

FZ6RY (36P4) U49
FZ6RYC (36P5) CALIFORNIA

1H36P-110EA

( )

YAMAHA GENUINE Parts & Accessories

FZ6RY/FZ6RYC
PARTS CATALOGUE
©2008 by Yamaha Motor Co., Ltd.
1st edition, December 2008
All rights reserved.
Any reprinting or unauthorized use
without the written permission of
Yamaha Motor Co., Ltd.
is expressly prohibited.
Printed in Japan.

FOREWORD

This Parts Catalogue is related to the parts for the model(s) on the cover page. When you are ordering replacement parts, please refer to this Parts Catalogue and quote both part numbers and part names correctly.

1. Modifications or additions which have been made after the issue of the Parts Catalogue will be announced in the Parts News.
   It is advisable that you make the necessary corrections to the Parts Catalogue according to the Parts News.

2. Abbreviations
   The following abbreviations are used in this Parts Catalogue.

   “UR” Use specified parts number.
   “UN” Use as many as needed.
   “AP” Alternate Parts
   “LM” Locally Made (Parts need to be ordered locally)
   “F#” Frame No. (Applicable machine No.)
   “O/S” Over Size

3. The number of components for assembly
   - Parts, which are to be supplied in an assembly, are listed with a dot (.) in front of the part name as shown below.
   - The numeral appearing to the right of each component part indicates the quantity of parts for each assembly unit.

PART NO.	DESCRIPTION	Q’TY	REMARKS
2F5–83310–60	FRONT FLASHER LIGHT ASSY	2	
115–83311–60	.BULB (6V–18W)	1	

4. Applicable colours of graphics are represented in the “REMARKS” as shown below.

PART NO.	DESCRIPTION	Q’TY	REMARKS
2N4–24110–00–X5	FUEL TANK COMP.	2	MXR
3J1–24240–10	.GRAPHIC, FUEL TANK	1	FOR MXR

5. Note that the illustrations for reference in finding parts numbers are not to be used for assembling. When assembling, please use the applicable service manual.

6. The asterisk (*) before a reference number indicates modified items after the first edition.

7. Applicable Serial No.

Engine Serial No.

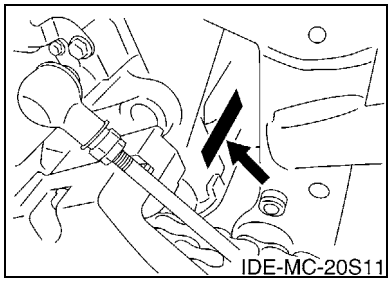

Frame Serial No.

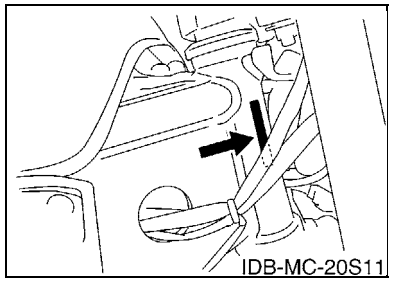

8. Applicable Colour Code (The (*) mark shows Model colour.)

Abbreviation	Colour Name	Colour Code
BWC1(*)	BLUISH WHITE COCKTAIL 1	0390
LGB	LOW GLOSS BLACK	0098
RYC1(*)	REDDISH YELLOW COCKTAIL 1	0251

MODEL LABEL

(1) A label called "Model Label" is affixed in the location as indicated in (3) below.
When using this parts catalogue, please be sure to cross–reference the "model code – production code No." in the catalogue with the "model code – production code No." indicated on the Model Label affixed onto the product concerned.

(2) "Model Label" Indication

	a b
○	xxxx – xxx
●	x c

a: Model Type Code
b: Production Code No.
c: Colouring Type

○	4TW1–010
●	A

(3) Model Label Affixing Location

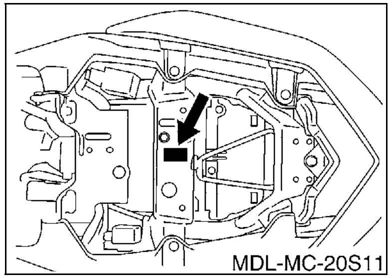

(4) Colouring Information

Model Code	Colouring Type Code	Colour Code	Colour Name	Abbrevia-tion
36P4	C	0251	REDDISH YELLOW COCKTAIL 1	RYC1
	D	0390	BLUISH WHITE COCKTAIL 1	BWC1
36P5	C	0251	REDDISH YELLOW COCKTAIL 1	RYC1
	D	0390	BLUISH WHITE COCKTAIL 1	BWC1

(5) Model Code – Production Code Number of Model Listed in This Parts Catalogue

Model Code	Production Code No.	Country (destination)	Model Code	Production Code No.	Country (destination)
36P4	010	U49			
36P5	010	CALIFORNIA			

CONTENTS

ENGINE

CYLINDER HEAD 1
CRANKSHAFT & PISTON 2
VALVE 3
CAMSHAFT & CHAIN 5
WATER PUMP 6
RADIATOR & HOSE 7
OIL PUMP 9
OIL CLEANER 10
INTAKE 11
INTAKE 2 12
AIR INDUCTION SYSTEM 14
EXHAUST 15
CRANKCASE 16
CRANKCASE COVER 1 17
STARTER 19
CLUTCH 20
TRANSMISSION 22
SHIFT CAM & FORK 24
SHIFT SHAFT 25

CHASSIS

FRAME 27
FENDER 28
SIDE COVER 30
REAR ARM 32
REAR SUSPENSION 33
STEERING 34
FRONT FORK 35
FUEL TANK 37
SEAT 39
FRONT WHEEL 41
FRONT BRAKE CALIPER 42
REAR WHEEL 43
REAR BRAKE CALIPER 45
STEERING HANDLE & CABLE 46
FRONT MASTER CYLINDER 47
STAND & FOOTREST 48
REAR MASTER CYLINDER 51
COWLING 1 53
COWLING 2 55
GENERATOR 58
STARTING MOTOR 59
FLASHER LIGHT 60
METER 61
HEADLIGHT 62
TAILLIGHT 63
HANDLE SWITCH & LEVER 64
ELECTRICAL 1 65
ELECTRICAL 2 67

INDEX

NUMERICAL INDEX 69

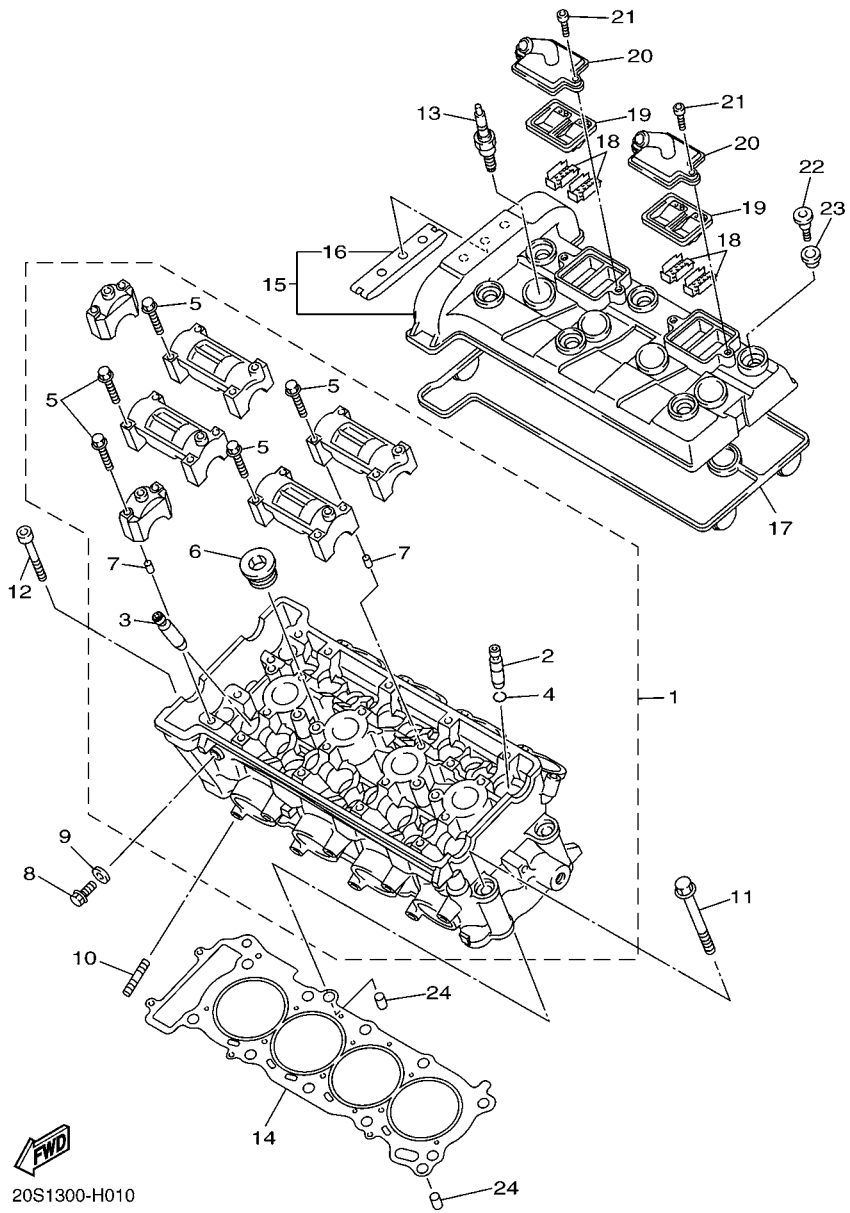

FIG. 1 CYLINDER HEAD

REF. NO.	PART NO.	DESCRIPTION	36P4	36P5				REMARKS
1	20S–11101–00	CYLINDER HEAD ASSY	1	1				
2	5EB–11133–10	.GUIDE, VALVE 1	8	8				
3	20S–11134–10	.GUIDE, VALVE 2	8	8				
4	93440–10153	.CIRCLIP	8	8				
5	90105–06027	.BOLT, FLANGE	20	20				
6	90340–20090	.PLUG, STRAIGHT SCREW	3	3				
7	91808–16023	.PIN, DOWEL	12	12				
8	95022–08012	BOLT, FLANGE	1	1				
9	90430–08119	GASKET	1	1				
10	95612–08625	BOLT, STUD	8	8				
11	90119–10003	BOLT, WITH WASHER	10	10				
12	91312–06060	BOLT	2	2				
13	94701–00318	PLUG, SPARK (NGK R CR9E)	4	4				
14	20S–11181–00	GASKET, CYLINDER HEAD 1	1	1				
15	1B3–11191–00	COVER, CYLINDER HEAD 1	1	1				
16	5BE–12241–00	.GUIDE, STOPPER 2	1	1				
17	20S–11193–00	GASKET, HEAD COVER 1	1	1				
18	5SL–1482K–00	PLATE	4	4				
19	5SL–14890–00	REED VALVE ASSY	2	2				
20	5SL–14899–00	CAP, CASE	2	2				
21	91312–06020	BOLT	4	4				
22	90109–066F0	BOLT	6	6				
23	5VY–1111G–00	RUBBER, MOUNT 1	6	6				
24	99530–10114	PIN, DOWEL	2	2				

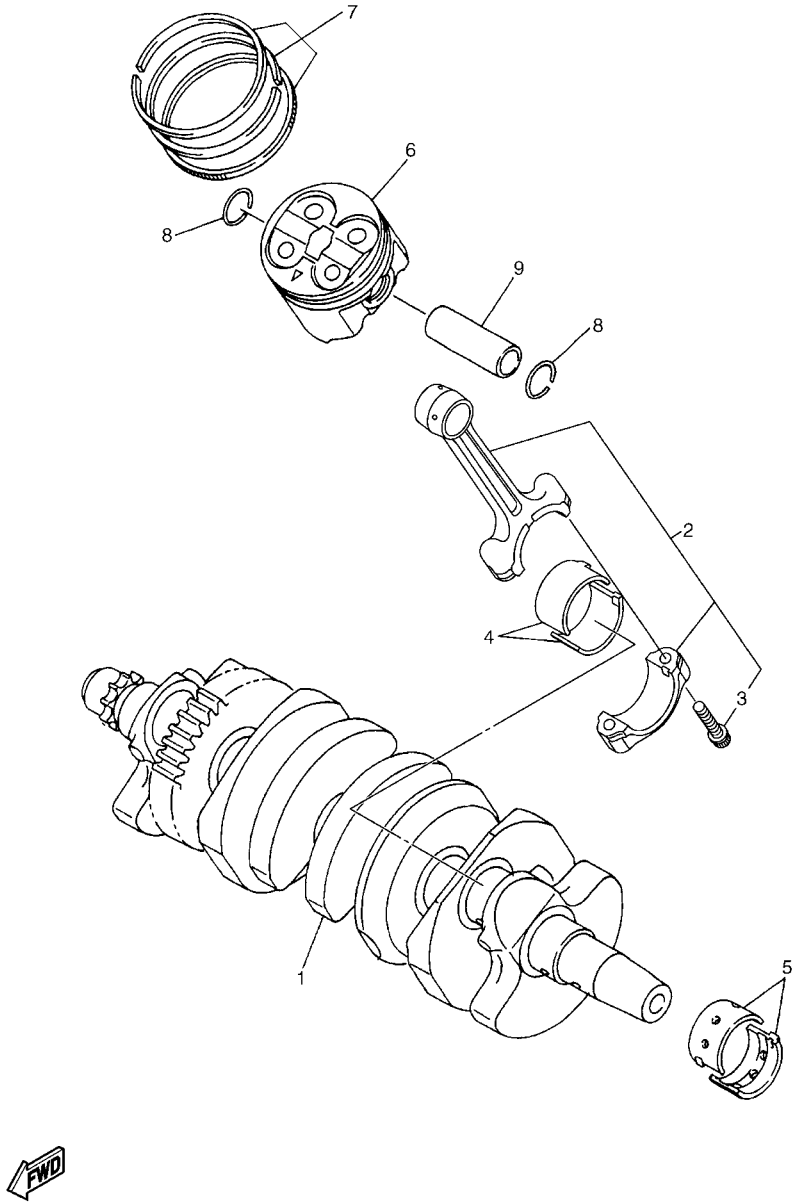

FIG. 2 CRANKSHAFT & PISTON

REF. NO.	PART NO.	DESCRIPTION	36P4	36P5				REMARKS
1	20S–11411–00	CRANKSHAFT	1	1				
2	5VX–11650–00	CONNECTING ROD ASSY	4	4				
3	5VX–11654–00	.BOLT, CONNECTING ROD	2	2				
4	5VX–11656–00	PLANE BEARING, CONNECTING ROD	8	8				UR BLUE
	5VX–11656–10	PLANE BEARING, CONNECTING ROD	8	8				UR BLACK
	5VX–11656–20	PLANE BEARING, CONNECTING ROD	8	8				UR BROWN
	5VX–11656–30	PLANE BEARING, CONNECTING ROD	8	8				UR GREEN
5	5EB–11416–A0	PLANE BEARING, CRANKSHAFT 1	10	10				UR WHITE
	5EB–11416–00	PLANE BEARING, CRANKSHAFT 1	10	10				UR BLUE
	5EB–11416–10	PLANE BEARING, CRANKSHAFT 1	10	10				UR BLACK
	5EB–11416–20	PLANE BEARING, CRANKSHAFT 1	10	10				UR BROWN
	5EB–11416–30	PLANE BEARING, CRANKSHAFT 1	10	10				UR GREEN
6	5SL–11631–00	PISTON (STD)	4	4				
7	20S–11603–00	PISTON RING SET (STD)	4	4				
8	93450–17129	CIRCLIP	8	8				
9	20S–11633–00	PIN, PISTON	4	4				

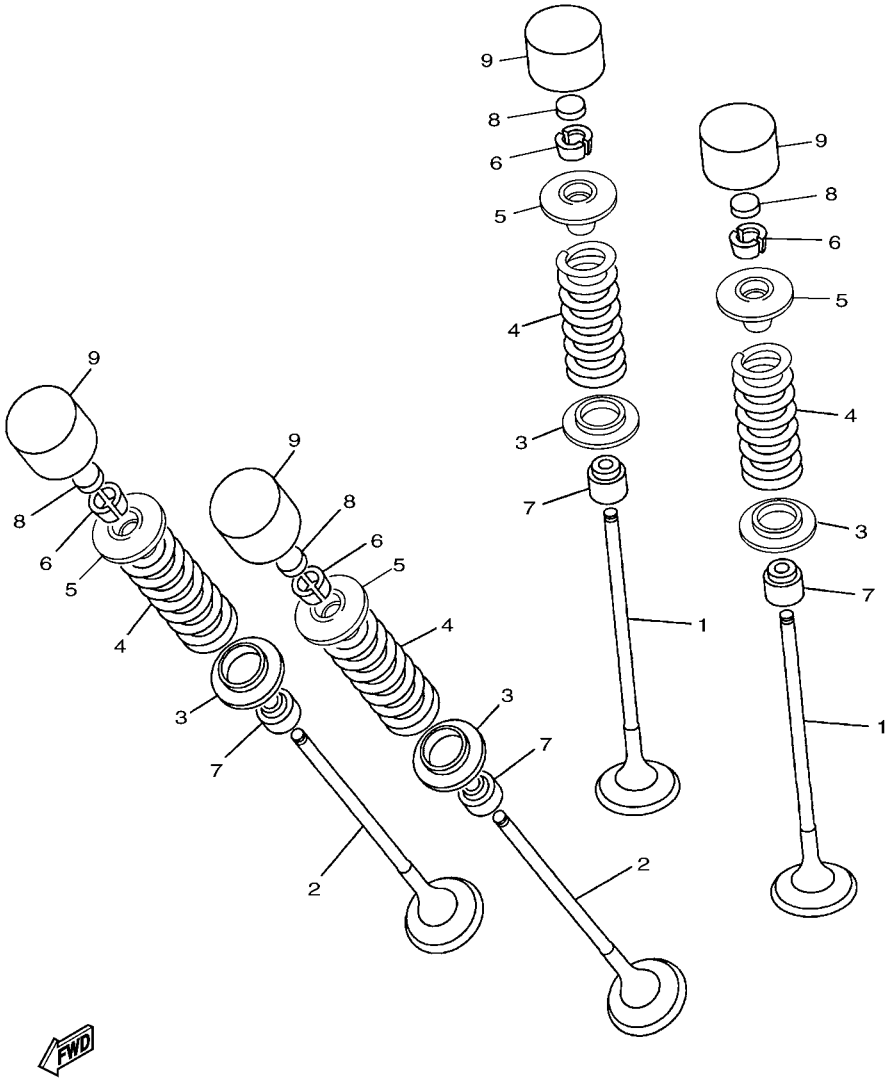

20S1300-H030

FIG. 3 VALVE

REF. NO.	PART NO.	DESCRIPTION	36P4	36P5				REMARKS
1	20S–12111–00	VALVE, INTAKE	8	8				
2	20S–12121–00	VALVE, EXHAUST	8	8				
3	5EB–12126–00	SEAT, VALVE SPRING 2	16	16				
4	20S–12113–00	SPRING, VALVE INNER	16	16				
5	5EB–12127–00	RETAINER, VALVE SPRING	16	16				
6	1HX–12118–00	COTTER, VALVE	32	32				
7	4TV–12119–00	SEAL, VALVE STEM	16	16				
8	1HX–12168–00	PAD, ADJUSTING 2 (1.20)	16	16				UR
	1HX–12168–20	PAD, ADJUSTING 2 (1.25)	16	16				UR
	1HX–12168–40	PAD, ADJUSTING 2 (1.30)	16	16				UR
	1HX–12168–60	PAD, ADJUSTING 2 (1.35)	16	16				UR
	1HX–12168–80	PAD, ADJUSTING 2 (1.40)	16	16				UR
	1HX–12168–A0	PAD, ADJUSTING 2 (1.45)	16	16				UR
	1HX–12168–F0	PAD, ADJUSTING 2 (1.50)	16	16				UR
	1HX–12168–H1	PAD, ADJUSTING 2 (1.55)	16	16				UR
	1HX–12168–K1	PAD, ADJUSTING 2 (1.60)	16	16				UR
	1HX–12168–M1	PAD, ADJUSTING 2 (1.65)	16	16				UR
	1HX–12168–R1	PAD, ADJUSTING 2 (1.70)	16	16				UR
	1HX–12168–U1	PAD, ADJUSTING 2 (1.75)	16	16				UR
	1HX–12168–W1	PAD, ADJUSTING 2 (1.80)	16	16				UR
	1HX–12168–Y1	PAD, ADJUSTING 2 (1.85)	16	16				UR
	1HX–12169–11	PAD, ADJUSTING 2 (1.90)	16	16				UR
	1HX–12169–31	PAD, ADJUSTING 2 (1.95)	16	16				UR
	1HX–12169–50	PAD, ADJUSTING 2 (2.00)	16	16				UR
	1HX–12169–70	PAD, ADJUSTING 2 (2.05)	16	16				UR
	1HX–12169–90	PAD, ADJUSTING 2 (2.10)	16	16				UR
	1HX–12169–E0	PAD, ADJUSTING 2 (2.15)	16	16				UR

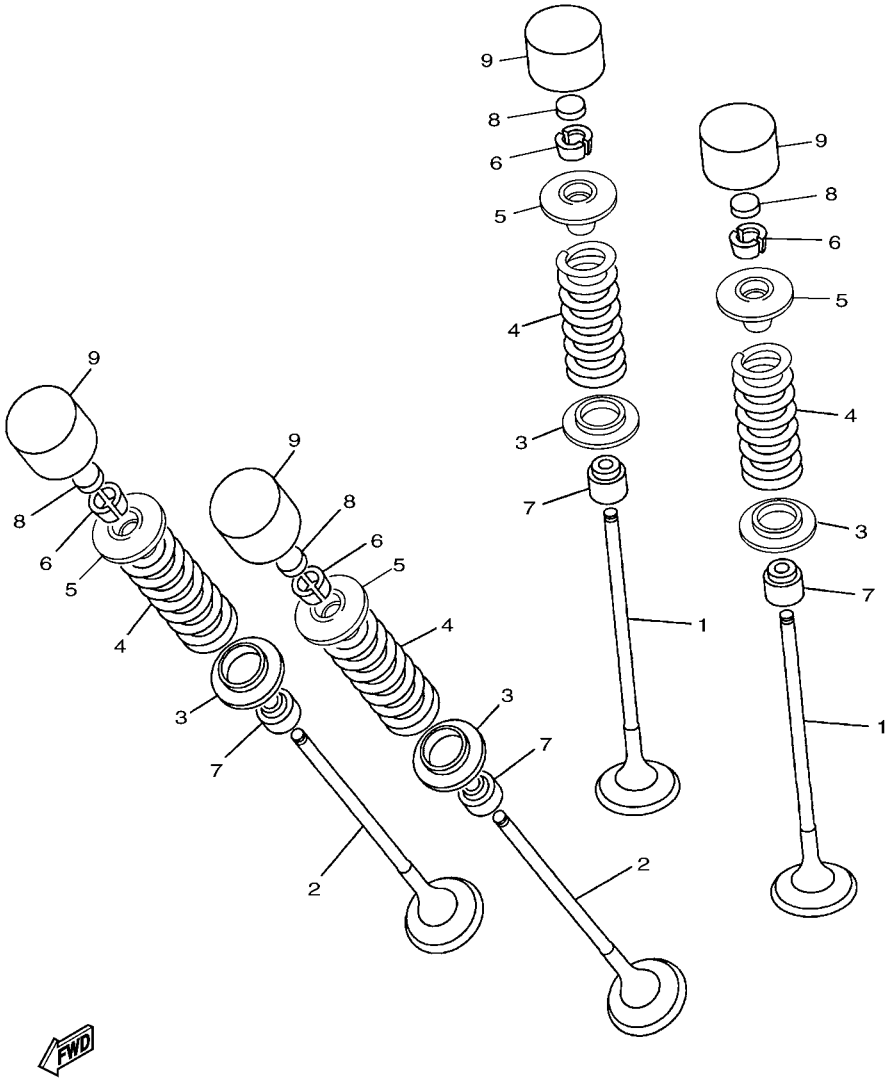

20S1300-H030

FIG. 3 VALVE

REF. NO.	PART NO.	DESCRIPTION	36P4	36P5				REMARKS
8	1HX–12169–G0	PAD, ADJUSTING 2 (2.20)	16	16				UR
	1HX–12169–J0	PAD, ADJUSTING 2 (2.25)	16	16				UR
	1HX–12169–L0	PAD, ADJUSTING 2 (2.30)	16	16				UR
	1HX–12169–N0	PAD, ADJUSTING 2 (2.35)	16	16				UR
	1HX–12169–T0	PAD, ADJUSTING 2 (2.40)	16	16				UR
9	5EB–12153–10	LIFTER, VALVE	16	16				UR YELLOW
	5EB–12153–09	LIFTER, VALVE (O/S)	16	16				AP GREEN

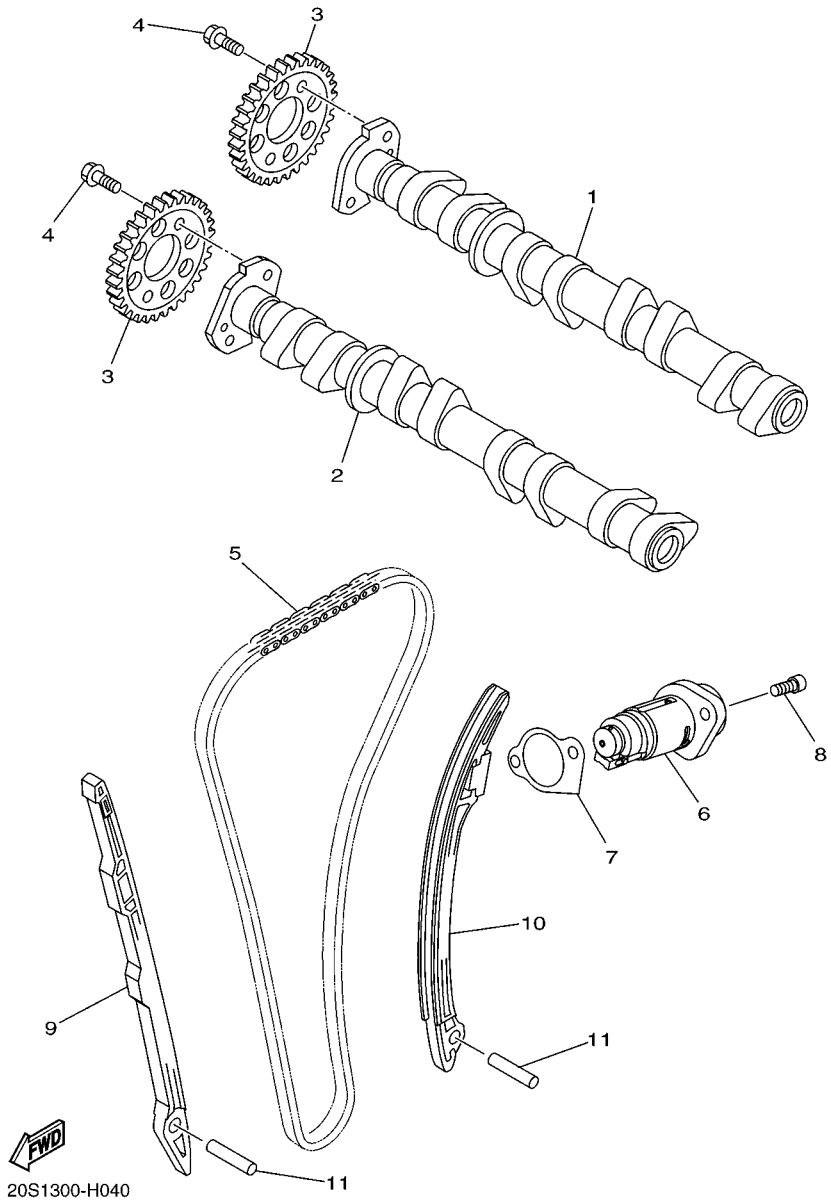

FIG. 4 CAMSHAFT & CHAIN

REF. NO.	PART NO.	DESCRIPTION	36P4	36P5				REMARKS
1	20S–12170–00	CAMSHAFT ASSY 1	1	1				
2	20S–12180–00	CAMSHAFT ASSY 2	1	1				
3	20S–12176–00	SPROCKET, CAM CHAIN	2	2				
4	90105–07004	BOLT, FLANGE	4	4				
5	94591–68120	CHAIN	1	1				
6	20S–12210–00	TENSIONER ASSY, CAM CHAIN	1	1				
7	2C0–12213–00	GASKET, TENSIONER CASE	1	1				
8	90110–06335	BOLT, HEXAGON SOCKET HEAD	2	2				
9	2C0–12251–00	DAMPER, CHAIN 1	1	1				
10	13S–12252–00	DAMPER, CHAIN 2	1	1				
11	93607–44002	PIN, DOWEL	2	2				

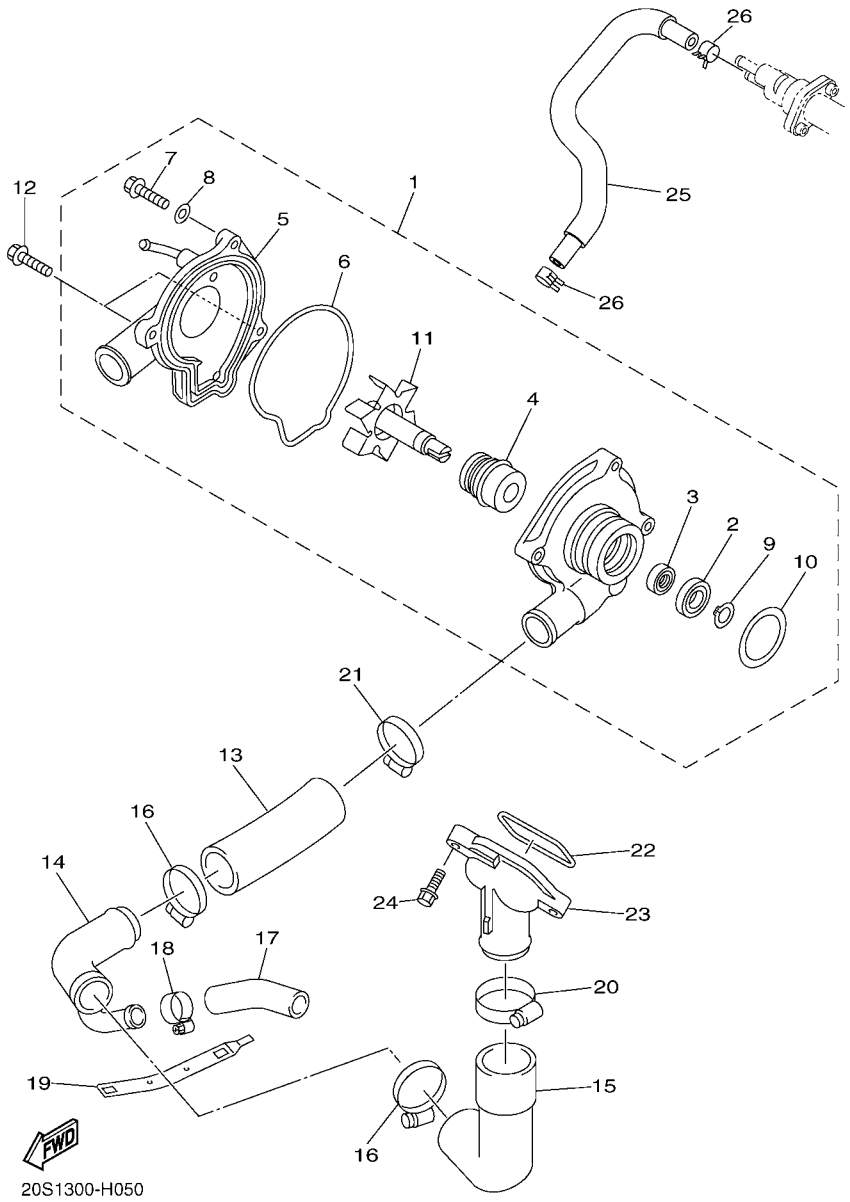

FIG. 5 WATER PUMP

REF. NO.	PART NO.	DESCRIPTION	36P4	36P5				REMARKS
1	20S–12420–00	WATER PUMP ASSY	1	1				
2	93306–00106	.BEARING	1	1				
3	93101–12173	.OIL SEAL	1	1				
4	4C8–12438–00	.SEAL, MECHANICAL	1	1				
5	5SL–12422–00	.COVER, HOUSING	1	1				
6	5EB–12439–00	.O-RING	1	1				
7	95024–06020	.BOLT, FLANGE	2	2				
8	90430–06014	.GASKET	1	1				
9	99009–12400	.CIRCLIP	1	1				
10	93210–33133	.O-RING	1	1				
11	20S–12450–00	.IMPELLER SHAFT ASSY	1	1				
12	90110–06086	BOLT, HEXAGON SOCKET HEAD	2	2				
13	4NK–12579–00	HOSE 4	1	1				
14	20S–12581–00	JOINT, HOSE 1	1	1				
15	5EB–12577–01	HOSE 2	1	1				
16	90450–35001	HOSE CLAMP ASSY	2	2				
17	5SL–12588–01	HOSE 5	1	1				
18	90450–22017	HOSE CLAMP ASSY	1	1				
19	5GV–1246E–00	COVER 2	1	1				
20	90450–38003	HOSE CLAMP ASSY	1	1				
21	90450–32006	HOSE CLAMP ASSY	1	1				
22	93210–46001	O-RING	1	1				
23	5EB–12469–00	JOINT 1	1	1				
24	90105–06053	BOLT, FLANGE	2	2				
25	5VX–1243A–00	HOSE 1	1	1				
26	90467–110A2	CLIP	2	2				

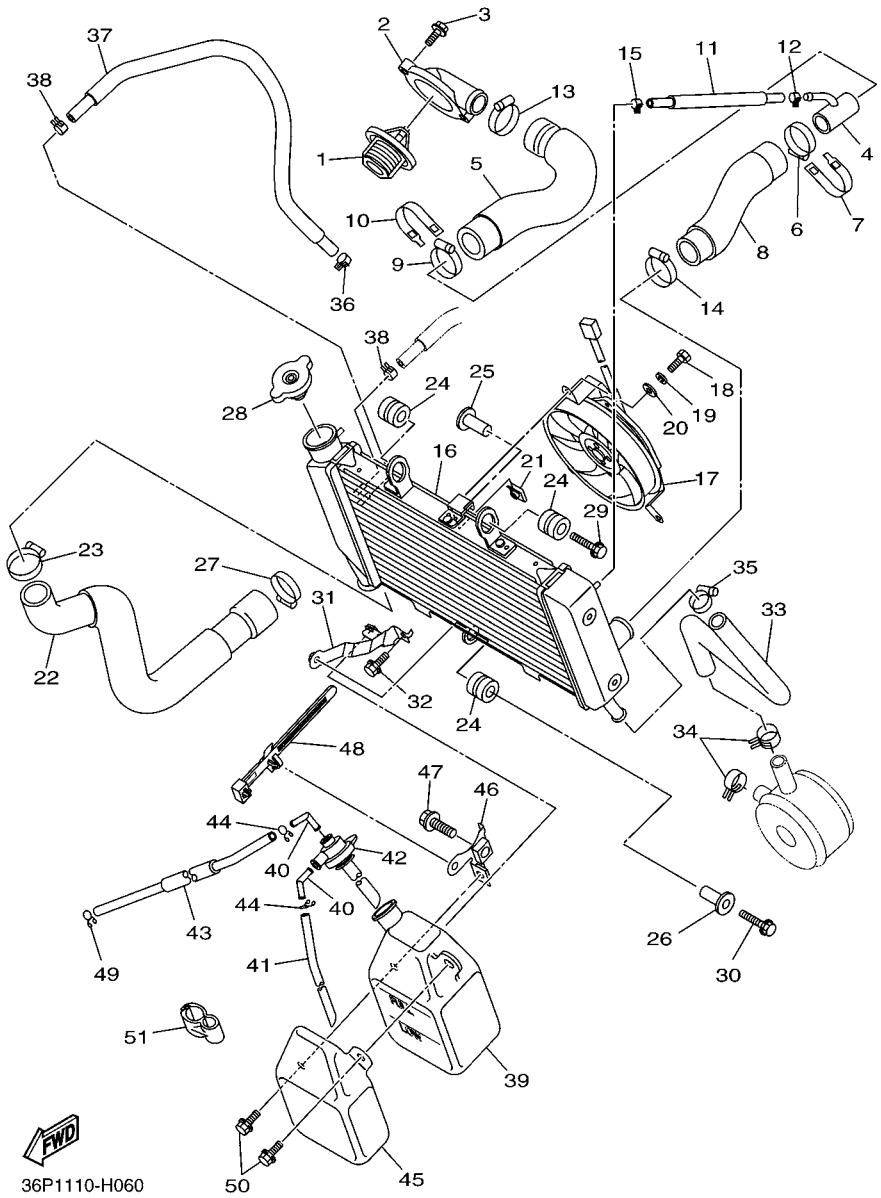

FIG. 6 RADIATOR & HOSE

REF. NO.	PART NO.	DESCRIPTION	36P4	36P5				REMARKS
1	5SL–12410–00	THERMOSTAT ASSY	1	1				
2	5VX–12413–00	COVER, THERMOSTAT	1	1				
3	90105–06164	BOLT, FLANGE	2	2				
4	20S–12582–00	JOINT, HOSE 2	1	1				
5	20S–12578–00	HOSE 3	1	1				
6	90450–32003	HOSE CLAMP ASSY	1	1				
7	20S–1246E–00	COVER 2	1	1				
8	20S–12551–00	HOSE 7	1	1				
9	90450–32003	HOSE CLAMP ASSY	1	1				
10	20S–1246E–00	COVER 2	1	1				
11	90445–12012	HOSE	1	1				
12	90467–11090	CLIP	1	1				
13	90450–32006	HOSE CLAMP ASSY	1	1				
14	90450–32003	HOSE CLAMP ASSY	1	1				
15	90467–11090	CLIP	1	1				
16	20S–12461–01	RADIATOR ASSY	1	1				
17	20S–12405–00	BLOWER ASSY	1	1				
18	97307–06012	BOLT	3	3				
19	92907–06100	WASHER, SPRING	3	3				
20	92907–06600	WASHER, PLATE	3	3				
21	1AA–12535–00	PLATE	3	3				
22	20S–12579–00	HOSE 4	1	1				
23	90450–32003	HOSE CLAMP ASSY	1	1				
24	90480–15363	GROMMET	3	3				
25	90387–0614M	COLLAR	1	1				
26	90387–0614M	COLLAR	1	1				
27	90450–32006	HOSE CLAMP ASSY	1	1				

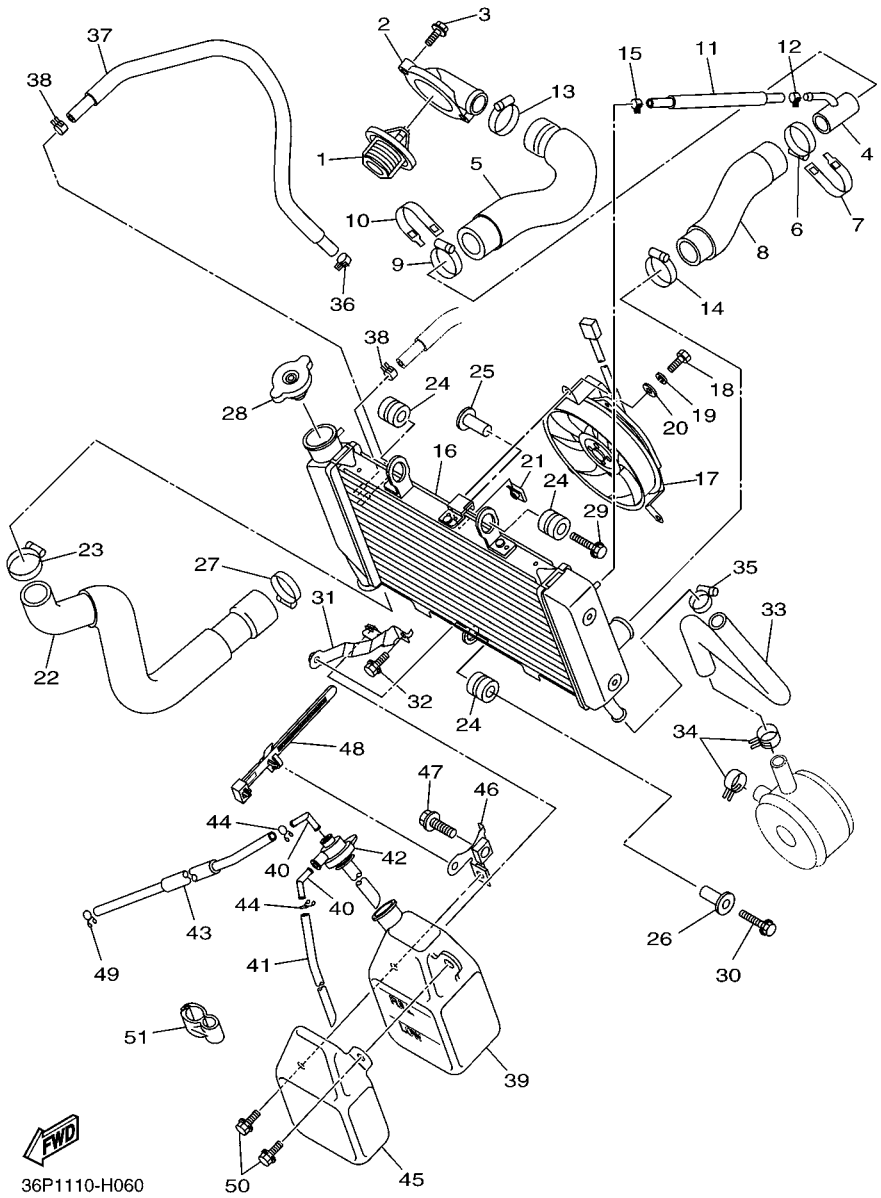

FIG. 6 RADIATOR & HOSE

REF. NO.	PART NO.	DESCRIPTION	36P4	36P5				REMARKS
28	22W–12462–00	CAP, RADIATOR	1	1				
29	95802–06025	BOLT, FLANGE	1	1				
30	95802–06030	BOLT, FLANGE	1	1				
31	20S–1244E–00	BRACKET 1	1	1				
32	95822–06012	BOLT, FLANGE	1	1				
33	20S–12589–00	HOSE 6	1	1				
34	90467–200A0	CLIP	2	2				
35	90450–22017	HOSE CLAMP ASSY	1	1				
36	90467–11090	CLIP	1	1				
37	90445–12009	HOSE	1	1				
38	90467–11090	CLIP	2	2				
39	4P5–21871–00	TANK, RECOVERY	1	1				
40	26H–21828–00	ELBOW	2	2				
41	90445–081F2	HOSE (L200)	1	1				
42	3P6–21875–00	CAP	1	1				
43	90445–08025	HOSE	1	1				
44	90467–08075	CLIP	2	2				
45	4P5–2172W–00	COVER	1	1				
46	4P5–21873–00	BRACKET, RECOVERY TANK	1	1				
47	95822–10020	BOLT, FLANGE	1	1				
48	90464–07012	CLAMP	1	1				
49	90467–08075	CLIP	1	1				
50	90105–060A6	BOLT, FLANGE	2	2				
51	90464–10233	CLAMP	1	1				

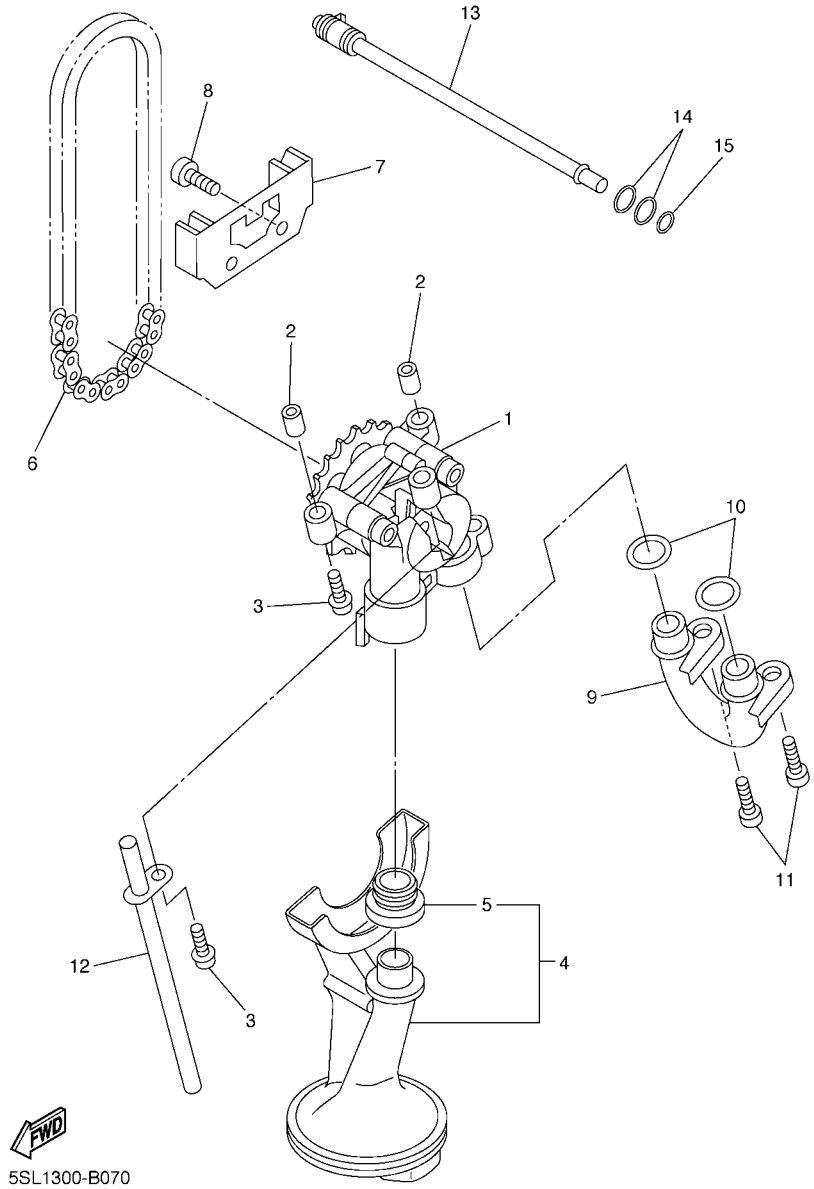

FIG. 7 OIL PUMP

REF. NO.	PART NO.	DESCRIPTION	36P4	36P5				REMARKS
1	5MT–13300–00	OIL PUMP ASSY	1	1				
2	91808–17032	PIN, DOWEL	2	2				
3	95812–06030	BOLT, FLANGE	3	3				
4	5SL–13410–00	STRAINER HOUSING ASSY	1	1				
5	5EB–13415–00	.SEAL, OIL STRAINER	1	1				
6	94580–25080	CHAIN	1	1				
7	5EB–13898–00	HOLDER	1	1				
8	90110–06161	BOLT, HEXAGON SOCKET HEAD	2	2				
9	2C0–13416–00	PIPE, OIL 1	1	1				
10	93210–14003	O-RING	2	2				
11	90110–06161	BOLT, HEXAGON SOCKET HEAD	2	2				
12	5EB–13161–00	PIPE, DELIVERY 1	1	1				
13	5EB–1316E–00	PIPE, DELIVERY 5	1	1				
14	93210–09165	O-RING	2	2				
15	93210–06667	O-RING	1	1				

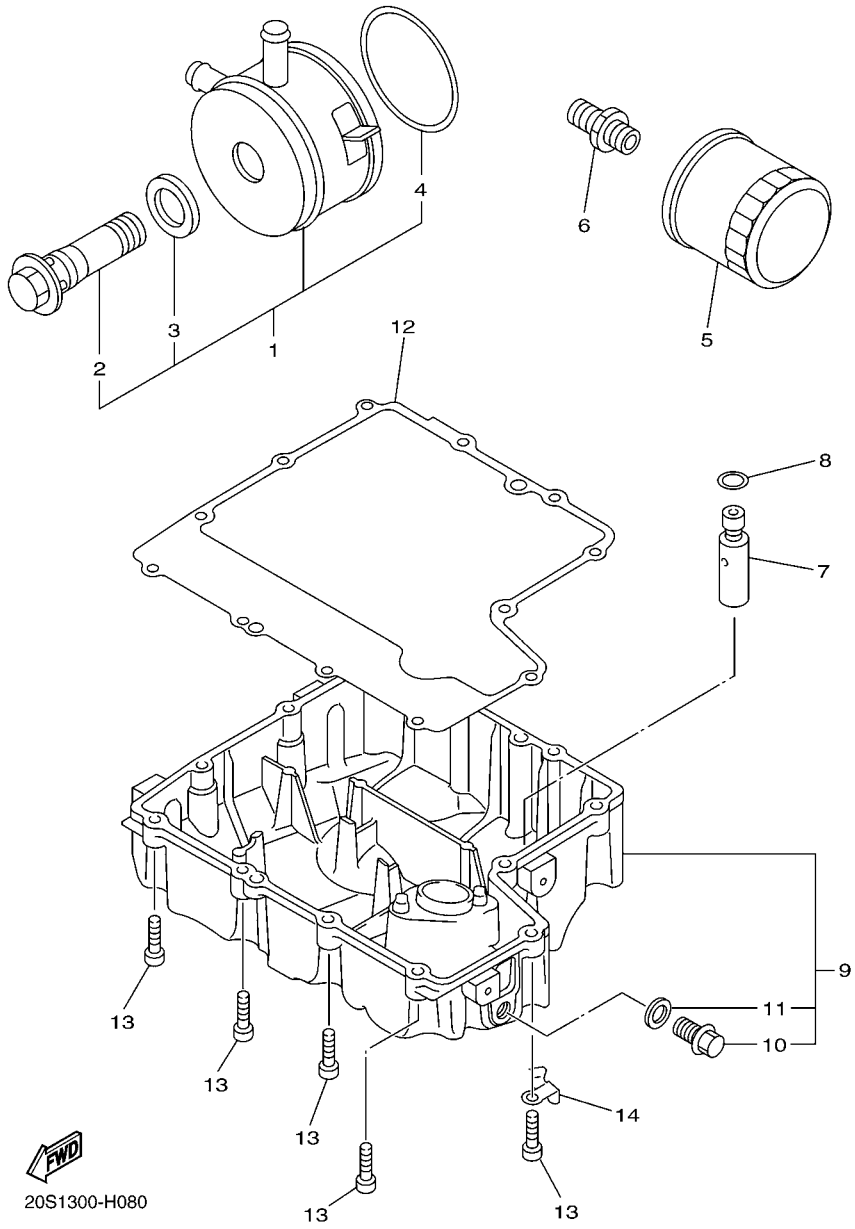

FIG. 8 OIL CLEANER

REF. NO.	PART NO.	DESCRIPTION	36P4	36P5				REMARKS
1	5EB–13470–00	OIL COOLER ASSY	1	1				
2	5EB–12822–00	.BOLT, UNION	1	1				
3	5EB–13475–00	.GASKET	1	1				
4	5JW–13473–00	.O-RING	1	1				
5	5GH–13440–20	ELEMENT ASSY, OIL CLEANER	1	1				
6	90401–20145	BOLT, UNION	1	1				
7	3KS–13490–00	RELIEF VALVE ASSY	1	1				
8	93210–15566	O-RING	1	1				
9	20S–13400–00	STRAINER COVER ASSY	1	1				
10	90340–14132	.PLUG, STRAIGHT SCREW	1	1				
11	214–11198–01	.GASKET	1	1				
12	20S–13414–00	GASKET, STRAINER COVER	1	1				
13	91312–06025	BOLT	12	12				
14	90465–10030	CLAMP	1	1				

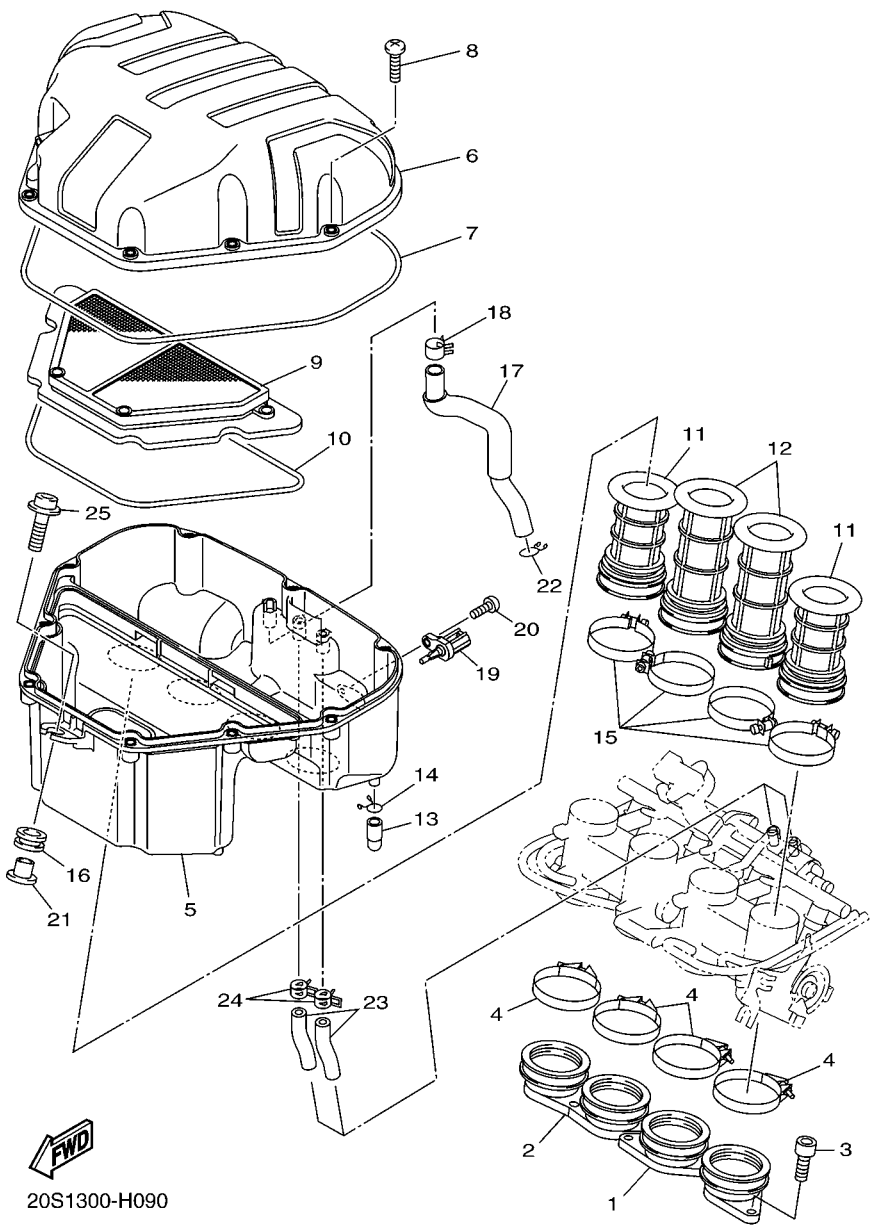

FIG. 9 INTAKE

REF. NO.	PART NO.	DESCRIPTION	36P4	36P5				REMARKS
1	20S–13586–00	JOINT, CARBURETOR 1	1	1				
2	20S–13596–00	JOINT, CARBURETOR 2	1	1				
3	91312–06020	BOLT	6	6				
4	90450–63003	HOSE CLAMP ASSY	4	4				
5	20S–14411–00	CASE, AIR CLEANER 1	1	1				
6	20S–14421–00	CASE, AIR CLEANER 2	1	1				
7	20S–14452–00	SEAL	1	1				
8	98902–05020	SCREW, BIND	9	9				
9	20S–14451–00	ELEMENT, AIR CLEANER	1	1				
10	20S–14457–00	SEAL	1	1				
11	20S–14453–00	JOINT, AIR CLEANER 1	2	2				
12	20S–14463–00	JOINT, AIR CLEANER 2	2	2				
13	4D9–1443E–00	PIPE, DRAIN	1	1				
14	90467–10041	CLIP	1	1				
15	90450–53002	HOSE CLAMP ASSY	4	4				
16	90480–12314	GROMMET	1	1				
17	20S–15373–00	PIPE, BREATHER	1	1				
18	90467–15001	CLIP	1	1				
19	8FP–85886–00	SENSOR, AIR TEMPERATURE	1	1				
20	98902–05012	SCREW, BIND	1	1				
21	90387–06205	COLLAR	1	1				
22	90467–14015	CLIP	1	1				
23	5VX–14148–01	PIPE	2	2				
24	90467–17003	CLIP	2	2				
25	90110–06233	BOLT, HEXAGON SOCKET HEAD	1	1				

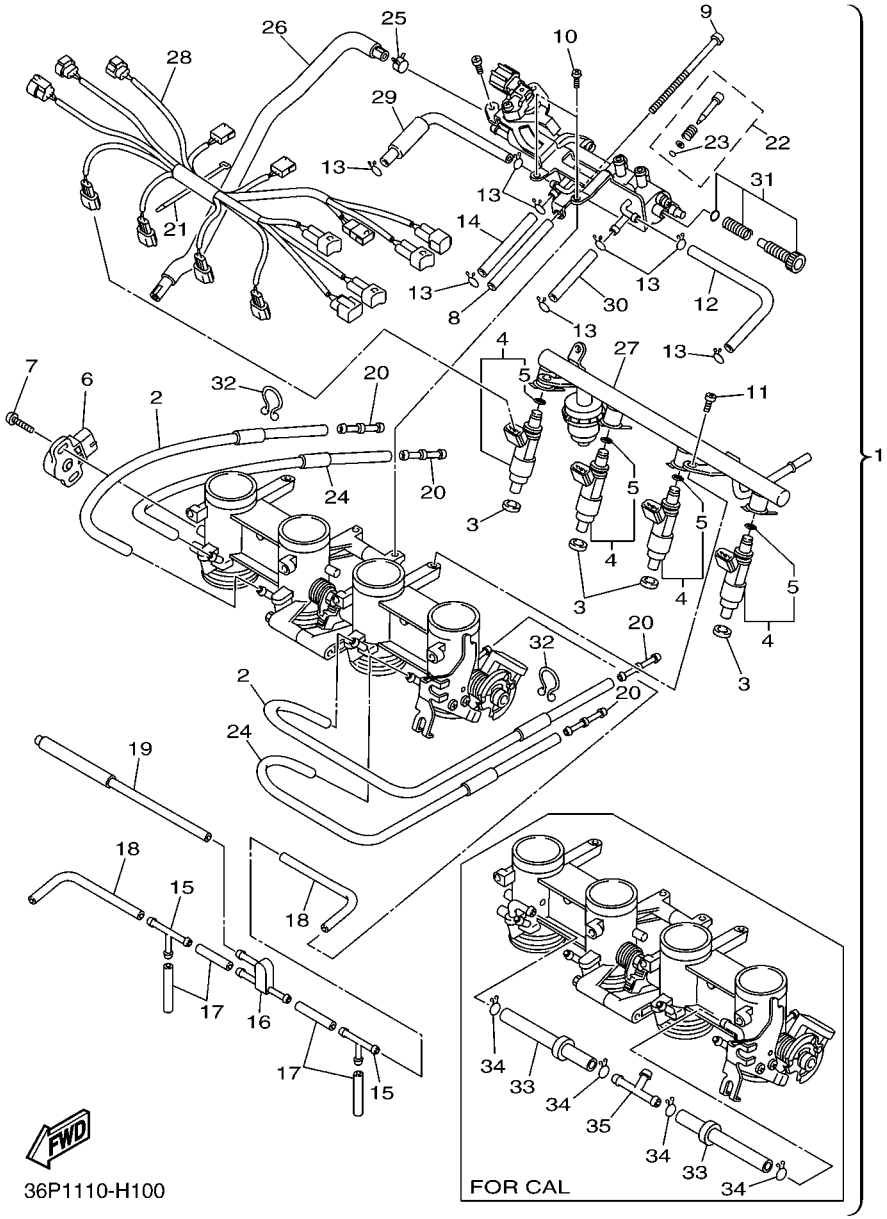

FIG. 10 INTAKE 2

REF. NO.	PART NO.	DESCRIPTION	36P4	36P5				REMARKS
1	20S–13750–00	THROTTLE BODY ASSY	1					
	36P–13750–00	THROTTLE BODY ASSY		1				FOR CALIFORNIA
2	5VX–14348–00	.PIPE 1	2	2				
3	8FP–13556–00	.GASKET, MANIFOLD	4	4				
4	5VX–13761–00	.INJECTOR	4	4				
5	5PS–14147–00	..O-RING	1	1				
6	2D1–85885–00	.THROTTLE SENSOR ASSY	1	1				
7	4KM–24453–00	.SCREW	2	2				
8	5VX–14149–00	.PIPE	1	1				
9	5VX–14565–00	.SCREW	1	1				
10	98507–05010	.SCREW, PAN HEAD	2	2				
11	98507–06012	.SCREW, PAN HEAD	2	2				
12	5VX–14396–00	.PIPE	1	1				
13	3UH–14937–00	.CLIP	8	8				
14	5VX–14987–00	.HOSE	1	1				
15	68V–24376–00	.PIPE, JOINT 1	2	2				
16	3XV–14251–00	.NIPPLE	1	1				
17	5FL–14348–10	.PIPE 1	4	4				
18	68V–13533–00	.HOSE, VACUUM SENSING 4	2	2				
19	5VX–1410E–00	.HOSE	1	1				
20	5PW–14251–00	.NIPPLE	4	4				
21	4KM–14137–00	.CLIP	1	1				
22	5JW–14104–00	.AIR SCREW SET	4	4				
23	3H1–14147–00	..O-RING	1	1				
24	5VX–14349–00	.PIPE	2	2				
25	90467–11090	.CLIP	1	1				
26	20S–1243E–00	.HOSE 2	1	1				

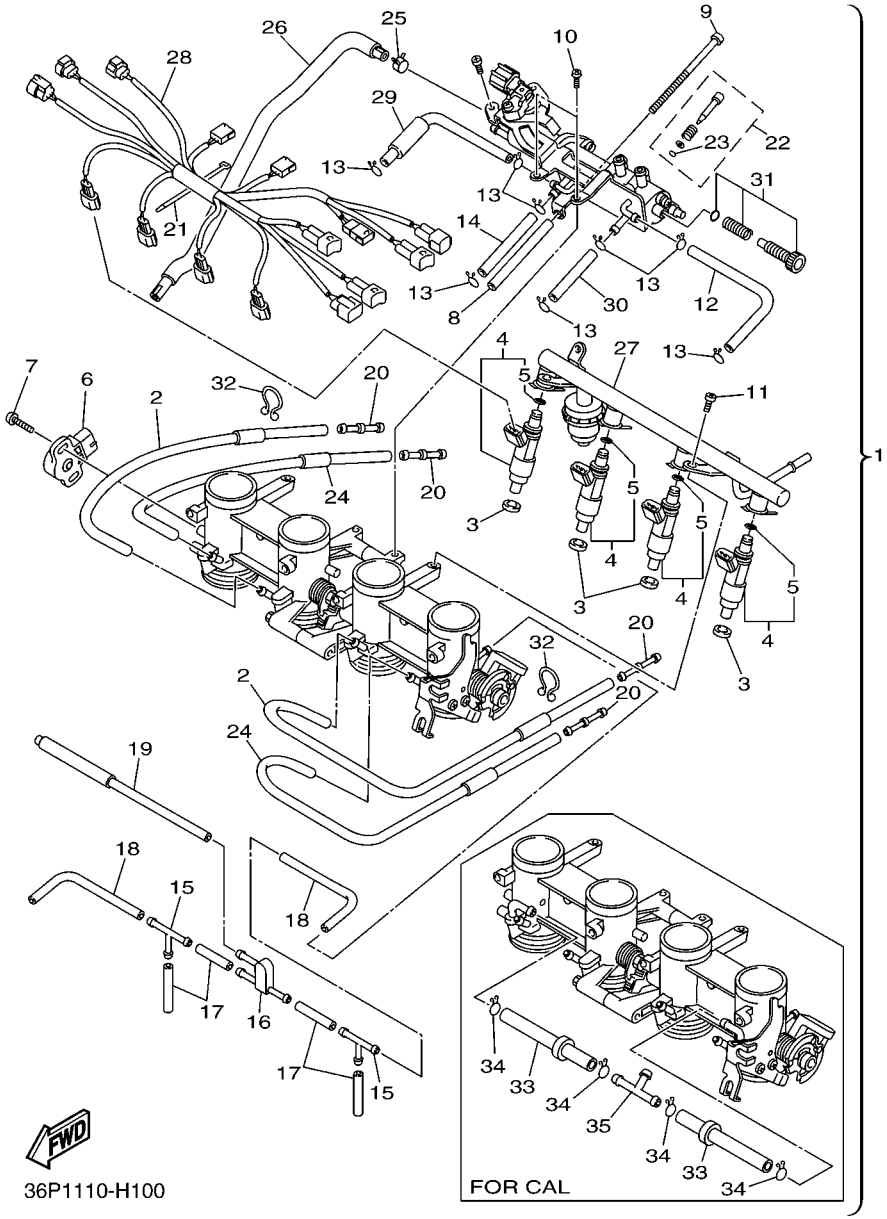

FIG. 10 INTAKE 2

REF. NO.	PART NO.	DESCRIPTION	36P4	36P5				REMARKS
27	5VX–13160–00	.DELIVERY PIPE ASSY 1	1	1				
28	20S–82386–00	.EXTENSION, WIRE HARNESS	1	1				
29	5VX–13533–00	.HOSE, VACUUM SENSING 4	1	1				
30	5VX–14807–00	.HOSE	1	1				
31	5VX–14503–00	.ADJUST SCREW SET	1	1				
32	90464–23041	.CLAMP	2	2				
33	5VX–14465–01	.PIPE		2				FOR CALIFORNIA
34	90467–10008	.CLIP		4				FOR CALIFORNIA
35	90413–08012	.WAY 3		1				FOR CALIFORNIA

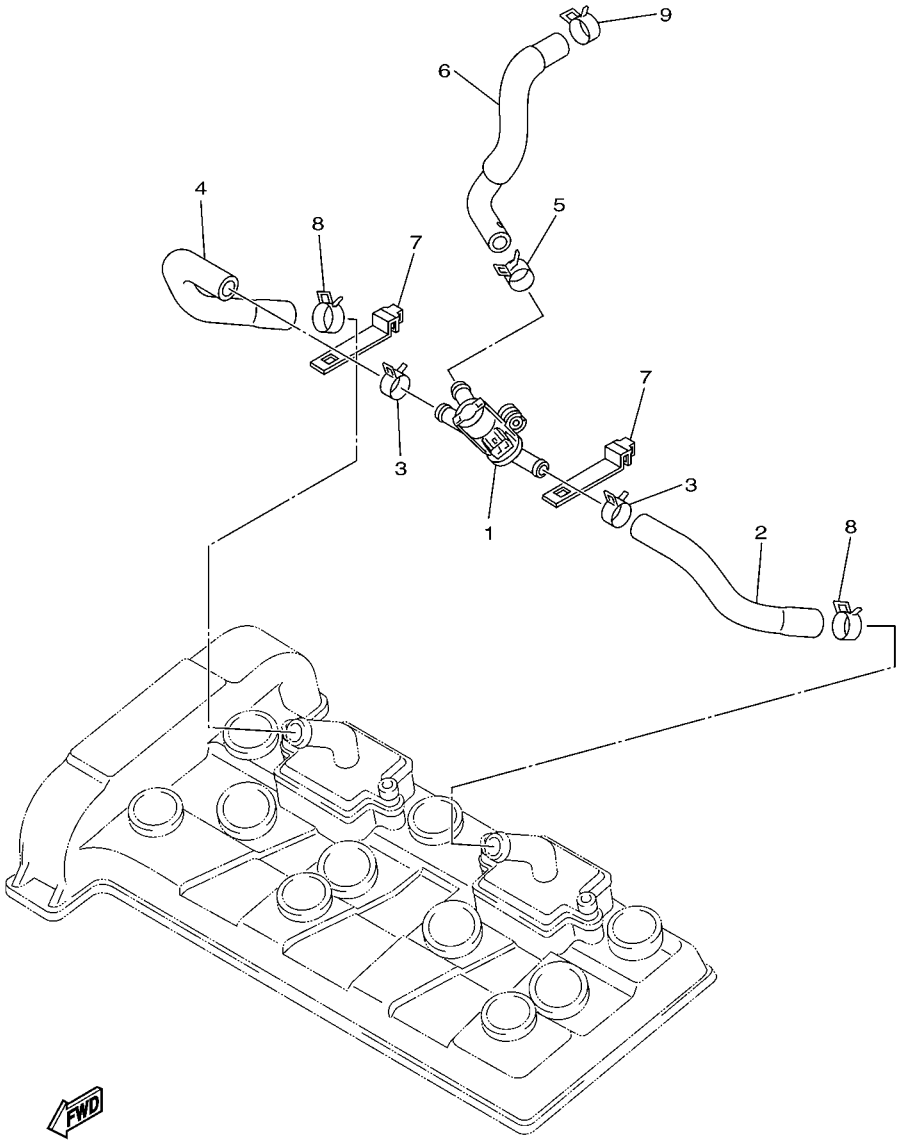

20S1300-H110

FIG. 11 AIR INDUCTION SYSTEM

REF. NO.	PART NO.	DESCRIPTION	36P4	36P5				REMARKS
1	20S–14840–00	AIR CUT VALVE ASSY	1	1				
2	20S–14881–00	HOSE, BEND 1	1	1				
3	90467–17089	CLIP	2	2				
4	20S–14882–00	HOSE, BEND 2	1	1				
5	90467–17089	CLIP	1	1				
6	20S–14883–00	HOSE, BEND 3	1	1				
7	5JW–14723–00	COVER 1	2	2				
8	90467–17003	CLIP	2	2				
9	90467–17128	CLIP	1	1				

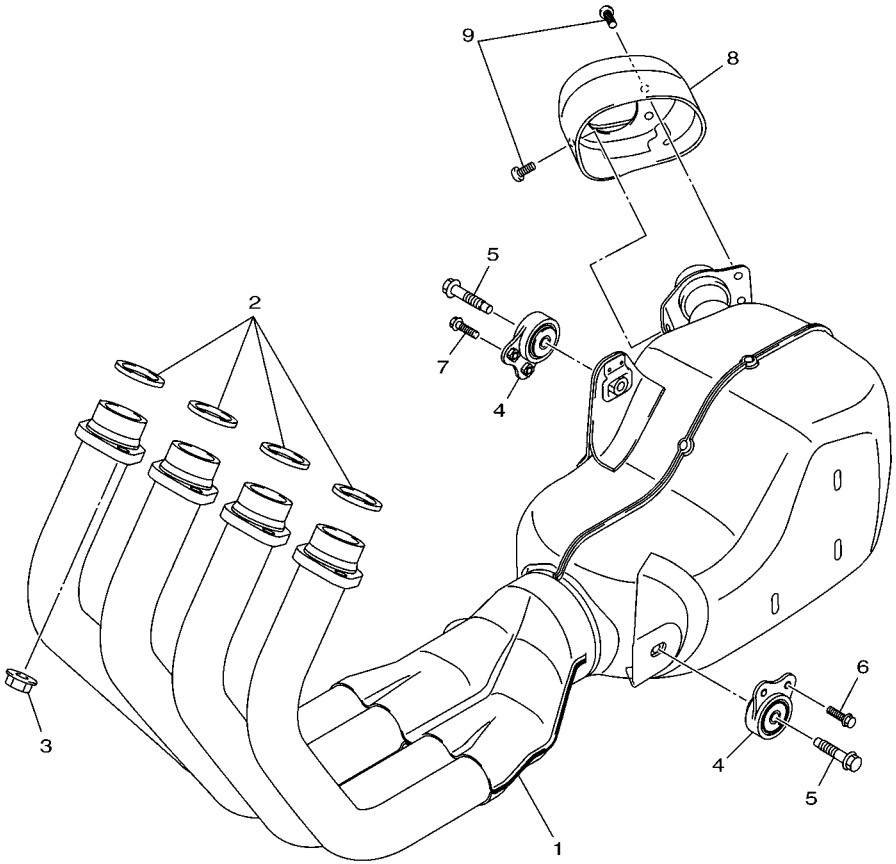

36P1110-H120

FIG. 12 EXHAUST

REF. NO.	PART NO.	DESCRIPTION	36P4	36P5				REMARKS
1	36P–14703–00	MUFFLER COMP. 1	1	1				
2	3YF–14613–01	GASKET, EXHAUST PIPE	4	4				
3	90179–08410	NUT	8	8				
4	20S–21445–00	STAY, MUFFLER 1	2	2				
5	90105–08164	BOLT, FLANGE	2	2				
6	95824–06020	BOLT, FLANGE	2	2				
7	95824–06016	BOLT, FLANGE	2	2				
8	20S–14799–00	CAP	1	1				
9	92014–06010	BOLT, BUTTON HEAD	3	3				

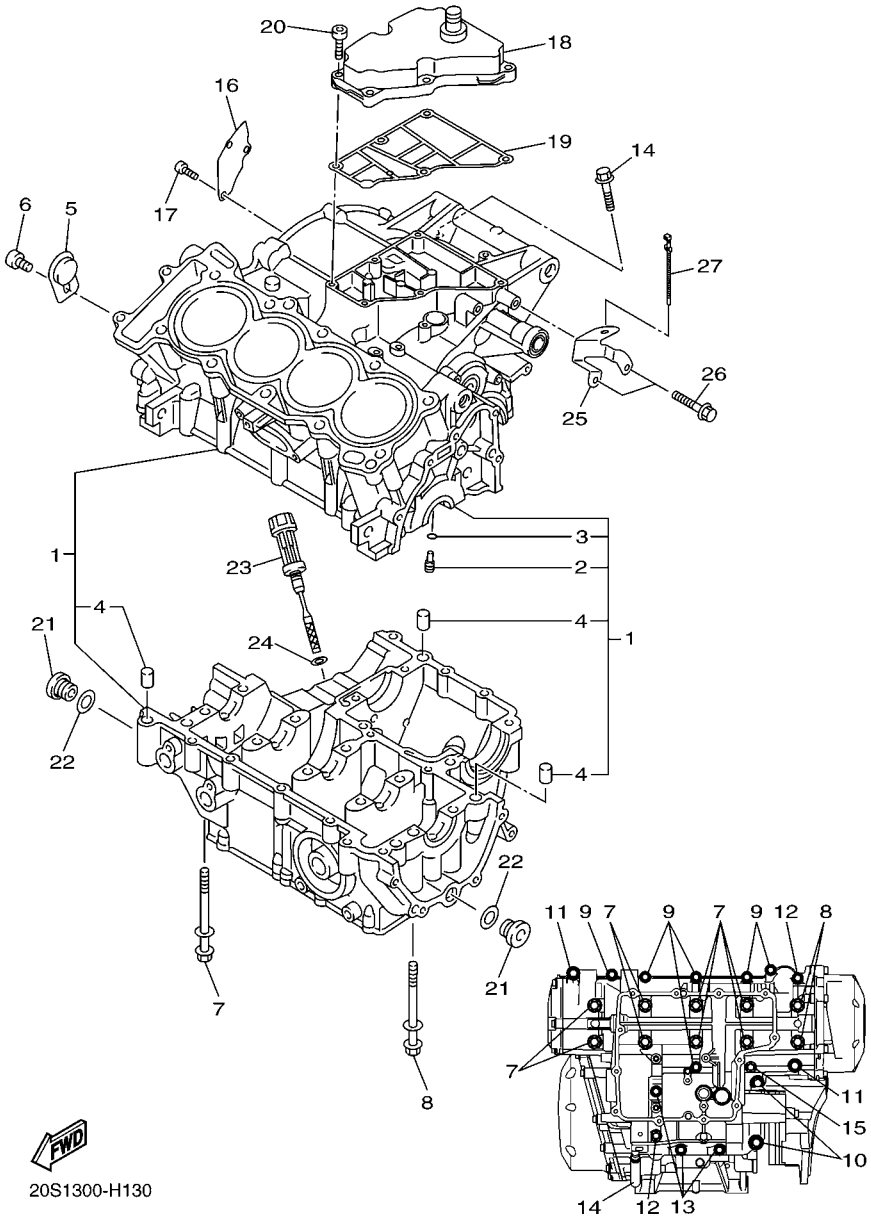

FIG. 13 CRANKCASE

REF. NO.	PART NO.	DESCRIPTION	36P4	36P5				REMARKS
1	20S–15100–01	CRANKCASE ASSY	1	1				
2	5EB–15155–00	.NOZZLE 3	4	4				
3	93210–04092	.O-RING	4	4				
4	99530–10014	.PIN, DOWEL	3	3				
5	5SL–15189–00	PLUG	1	1				
6	90149–06082	SCREW	1	1				
7	90119–08083	BOLT, WITH WASHER	8	8				
8	90119–08084	BOLT, WITH WASHER	2	2				
9	95812–06055	BOLT, FLANGE	6	6				
10	95812–08065	BOLT, FLANGE	2	2				
11	90109–06168	BOLT	2	2				
12	95812–06065	BOLT, FLANGE	2	2				
13	95812–06045	BOLT, FLANGE	3	3				
14	95812–06100	BOLT, FLANGE	1	1				
15	90105–06145	BOLT, FLANGE	1	1				
16	20S–11165–00	PLATE, BREATHER	1	1				
17	90149–06082	SCREW	3	3				
18	20S–15413–00	COVER	1	1				
19	20S–15462–00	GASKET, CRANKCASE COVER 3	1	1				
20	91312–06025	BOLT	6	6				
21	36Y–15189–00	PLUG	2	2				
22	93210–16325	O-RING	2	2				
23	5EB–15362–00	PLUG, OIL LEVEL	1	1				
24	93210–09165	O-RING	1	1				
25	20S–15544–00	STAY 1	1	1				
26	95022–06012	BOLT, FLANGE	2	2				
27	90464–34002	CLAMP	1	1				

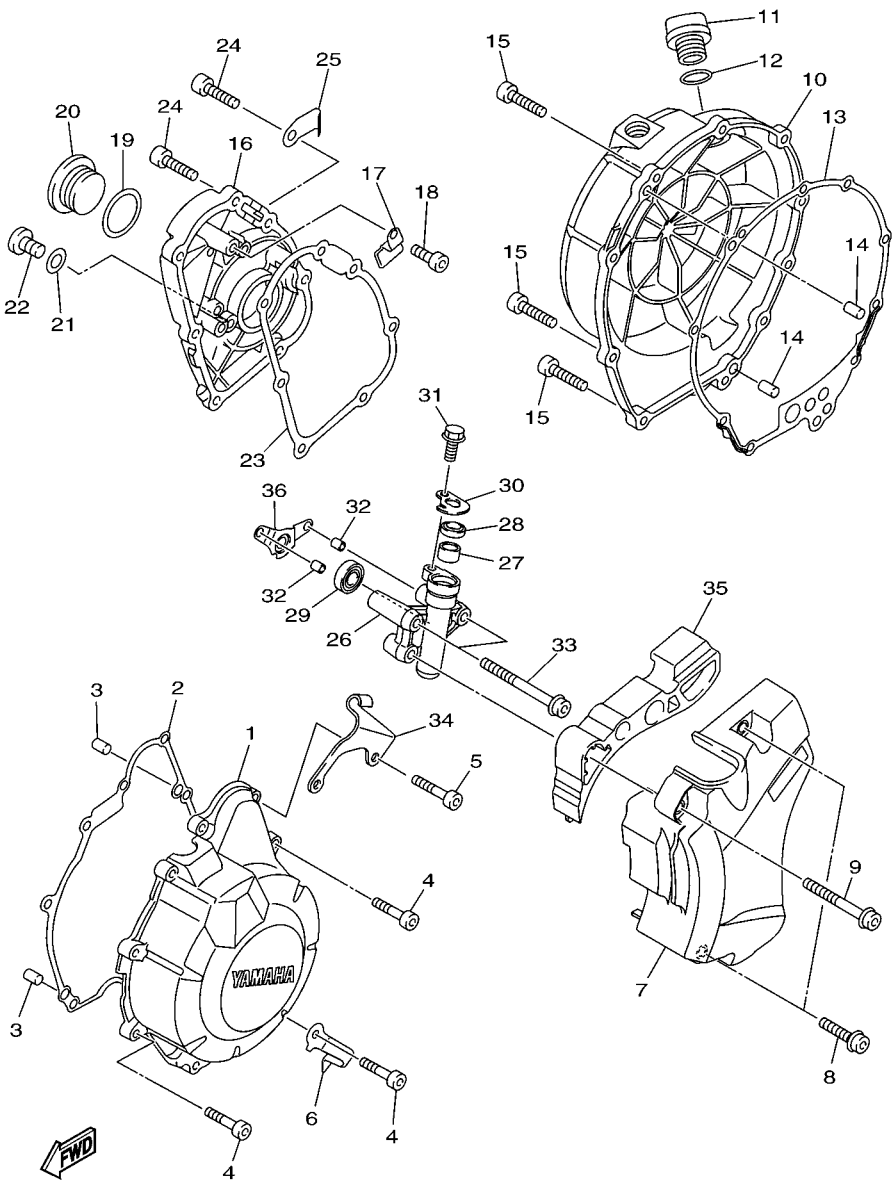

FIG. 14 CRANKCASE COVER 1

REF. NO.	PART NO.	DESCRIPTION	36P4	36P5				REMARKS
1	36P–15411–00	COVER, CRANKCASE 1	1	1				
2	5VX–15451–01	GASKET, CRANKCASE COVER 1	1	1				
3	99530–08012	PIN, DOWEL	2	2				
4	90110–06295	BOLT, HEXAGON SOCKET HEAD	7	7				
5	91314–06030	BOLT, HEXAGON SOCKET HEAD	2	2				
6	90465–08045	CLAMP	1	1				
7	20S–15418–00	COVER, CHAIN CASE	1	1				
8	90110–06329	BOLT, HEXAGON SOCKET HEAD	2	2				
9	90110–06330	BOLT, HEXAGON SOCKET HEAD	1	1				
10	36P–15421–00	COVER, CRANKCASE 2	1	1				
11	3F9–15362–00	PLUG, OIL LEVEL	1	1				
12	93210–27194	O-RING	1	1				
13	20S–15461–00	GASKET, CRANKCASE COVER 2	1	1				
14	93608–17263	PIN, DOWEL	2	2				
15	90110–06295	BOLT, HEXAGON SOCKET HEAD	10	10				
16	36P–15416–00	COVER, OIL PUMP	1	1				
17	90465–14011	CLAMP	1	1				
18	90110–06161	BOLT, HEXAGON SOCKET HEAD	1	1				
19	93210–32172	O-RING	1	1				
20	90340–32004	PLUG, STRAIGHT SCREW	1	1				
21	90430–08143	GASKET	1	1				
22	92014–08014	BOLT, BUTTON HEAD	1	1				
23	20S–15456–00	GASKET, OIL PUMP COVER 1	1	1				
24	90110–06274	BOLT, HEXAGON SOCKET HEAD	7	7				
25	90465–10042	CLAMP	1	1				
26	20S–15425–00	COVER, GENERATOR 2	1	1				
27	93317–11295	BEARING	1	1				

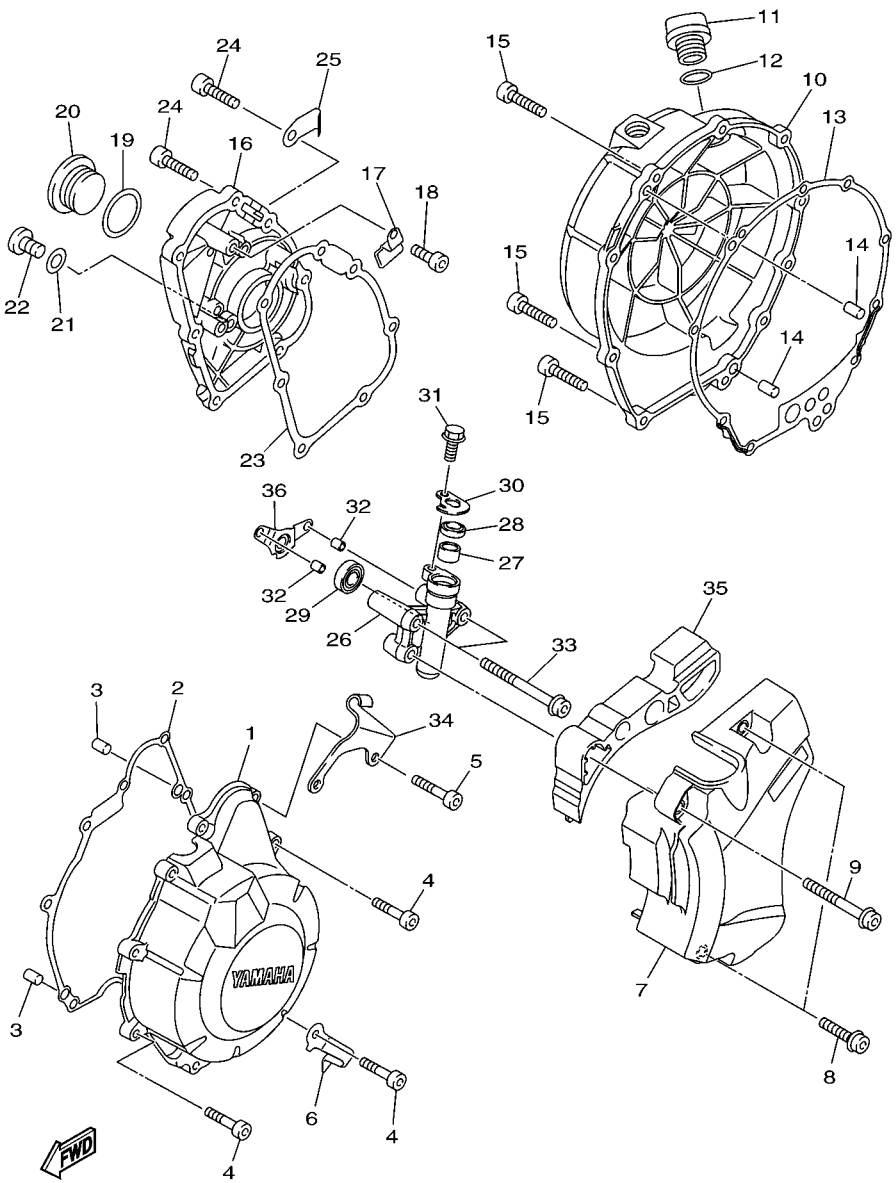

FIG. 14 CRANKCASE COVER 1

REF. NO.	PART NO.	DESCRIPTION	36P4	36P5				REMARKS
28	93102–12224	OIL SEAL	1	1				
29	93109–08061	OIL SEAL	1	1				
30	20S–16384–00	PLATE, SEAT	1	1				
31	95022–06014	BOLT, FLANGE	1	1				
32	99590–08012	PIN, DOWEL	2	2				
33	90110–06307	BOLT, HEXAGON SOCKET HEAD	2	2				
34	20S–15441–00	HOLDER, CLUTCH CABLE	1	1				
35	20S–15377–00	GUIDE, INLET	1	1				
36	20S–15185–00	PROTECTER, OIL SEAL	1	1				

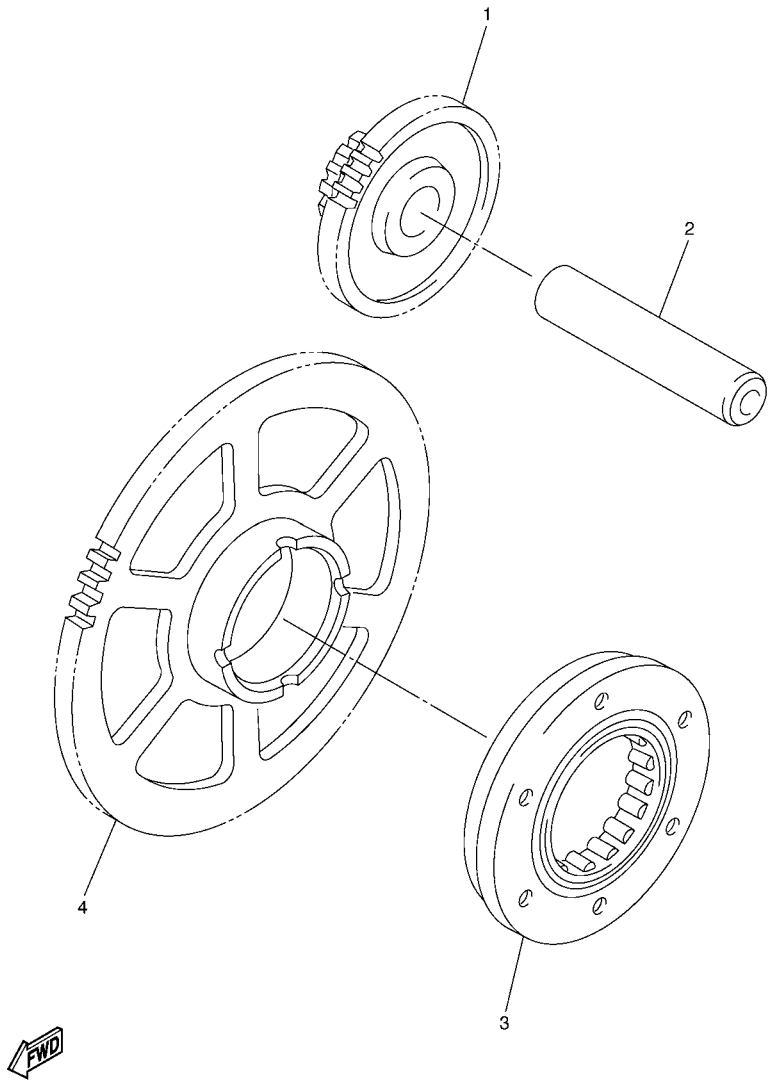

FIG. 15 STARTER

REF. NO.	PART NO.	DESCRIPTION	36P4	36P5				REMARKS
1	20S–15512–00	GEAR, IDLER 1	1	1				
2	5EB–15521–00	SHAFT 1	1	1				
3	5SL–15590–00	STARTER ONE-WAY ASSY	1	1				
4	5MT–15515–00	GEAR 3	1	1				

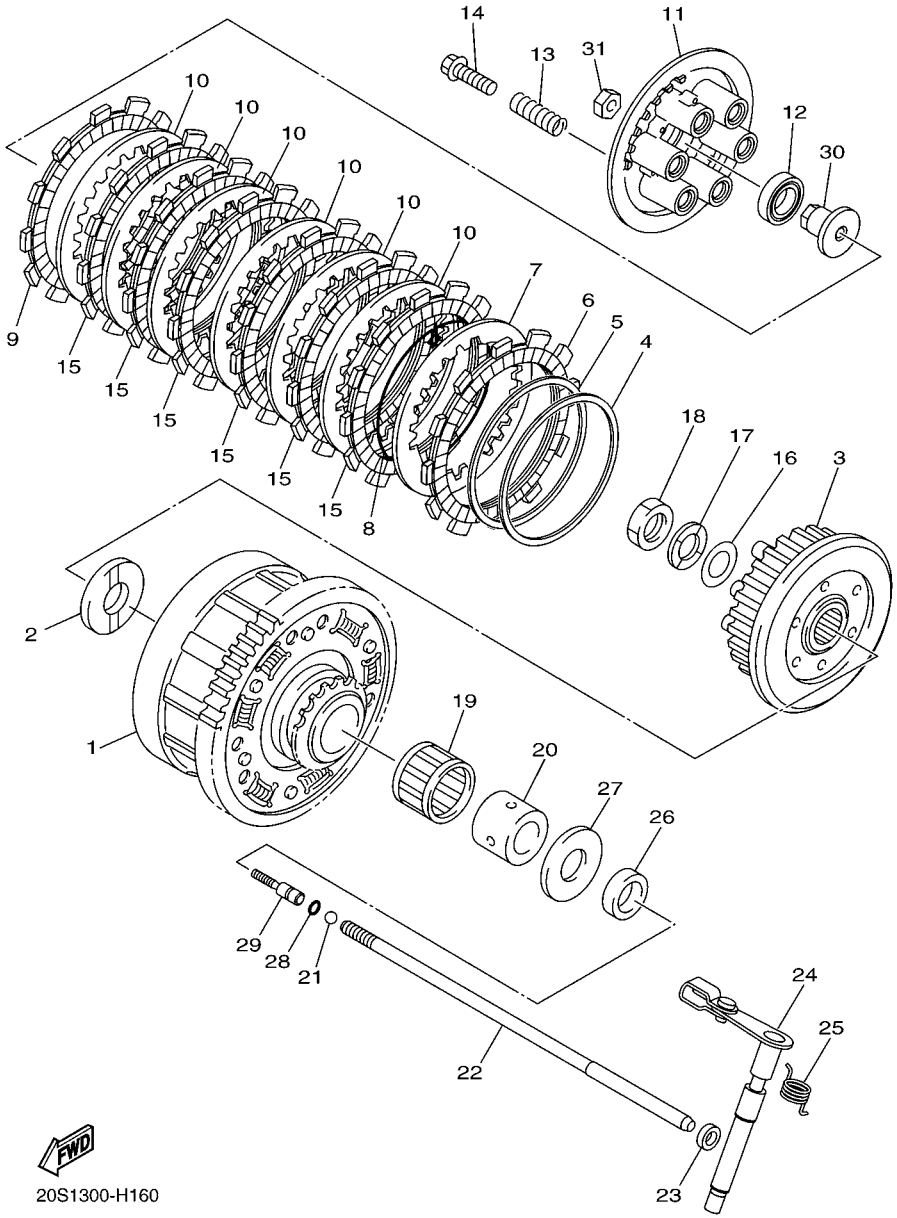

FIG. 16 CLUTCH

REF. NO.	PART NO.	DESCRIPTION	36P4	36P5				REMARKS
1	20S–16150–00	PRIMARY DRIVEN GEAR COMP.	1	1				
2	5EB–16154–00	PLATE, THRUST 1	1	1				
3	20S–16371–10	BOSS, CLUTCH	1	1				
4	20S–16384–10	PLATE, SEAT	1	1				
5	5LV–16383–00	SPRING, CLUTCH BOSS	1	1				
6	5Y1–16331–01	PLATE, FRICTION 2	1	1				
7	3J2–16324–00	PLATE, CLUTCH 1 (T=2.0)	1	1				
8	1J7–16385–00	RING, CLUTCH BOSS	1	1				
9	4H7–16321–02	PLATE, FRICTION	1	1				
10	3J2–16324–00	PLATE, CLUTCH 1 (T=2.0)	6	6				
11	20S–16351–00	PLATE, PRESSURE 1	1	1				
12	93306–00304	BEARING	1	1				
13	90501–225A9	SPRING, COMPRESSION	6	6				
14	90119–06252	BOLT, WITH WASHER	6	6				
15	5LV–16321–20	PLATE, FRICTION	6	6				
16	90201–20030	WASHER, PLATE	1	1				
17	90208–20001	WASHER, CONICAL SPRING	1	1				
18	90179–20007	NUT	1	1				
19	93310–340N8	BEARING	1	1				
20	90387–25024	COLLAR	1	1				
21	93511–32017	BALL	1	1				
22	20S–16357–00	ROD, PUSH 2	1	1				
23	93109–08061	OIL SEAL	1	1				
24	20S–16380–00	PUSH LEVER ASSY	1	1				
25	90508–18052	SPRING, TORSION	1	1				
26	90201–255A6	WASHER, PLATE	1	1				
27	1AE–16164–00	PLATE, THRUST 2	1	1				

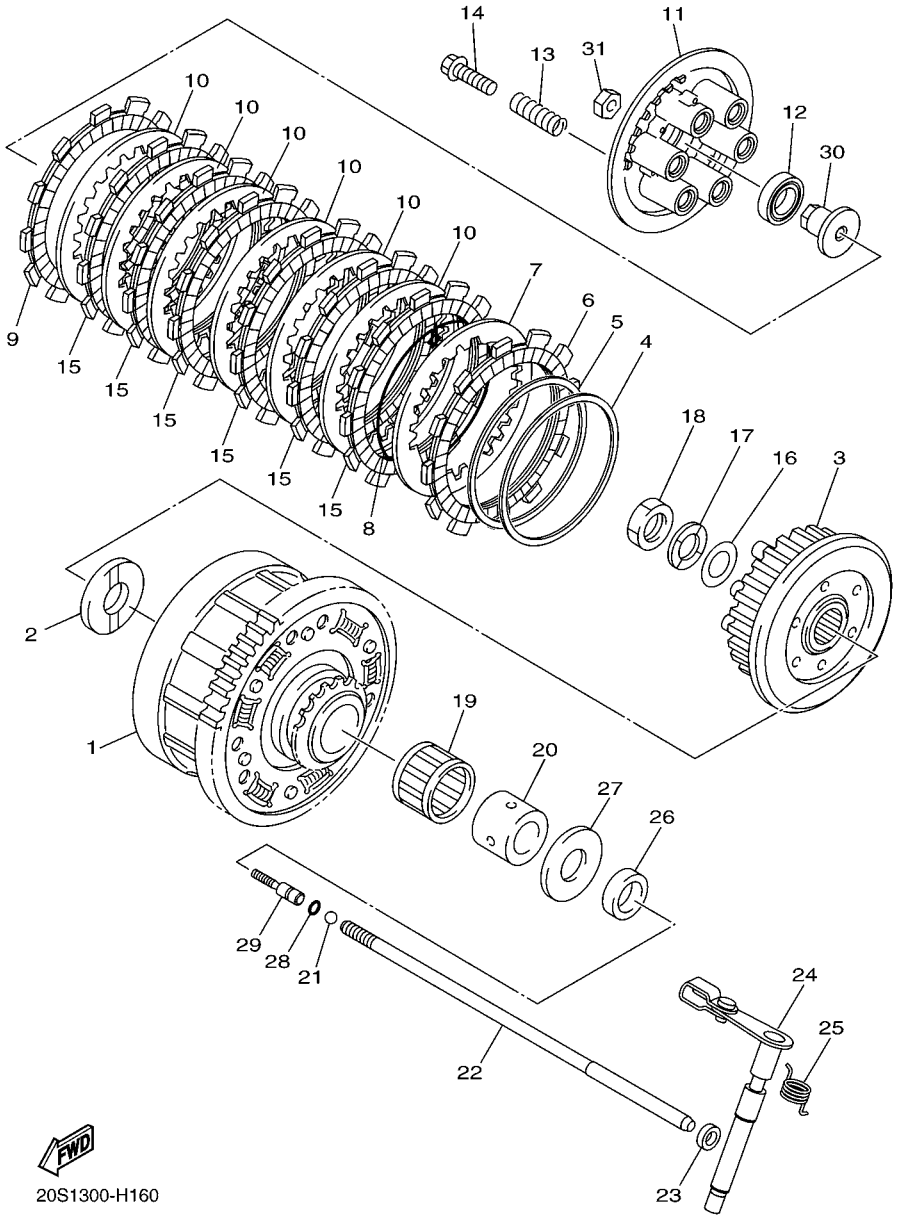

FIG. 16 CLUTCH

REF. NO.	PART NO.	DESCRIPTION	36P4	36P5				REMARKS
28	93210–06632	O-RING	1	1				
29	20S–16356–00	ROD, PUSH 1	1	1				
30	20S–16358–00	PLATE, PUSH	1	1				
31	95302–06600	NUT	1	1				

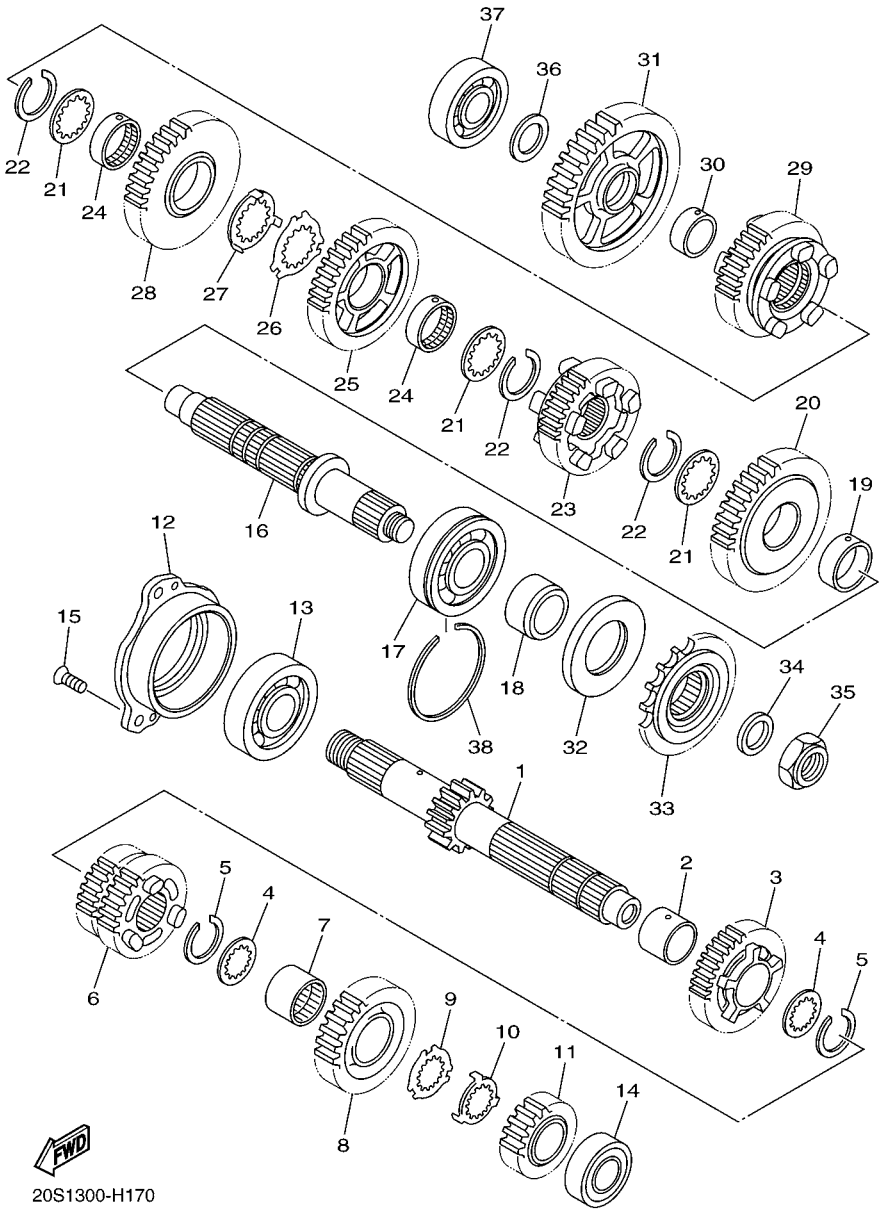

FIG. 17 TRANSMISSION

REF. NO.	PART NO.	DESCRIPTION	36P4	36P5				REMARKS
1	20S–17411–00	AXLE, MAIN (13T)	1	1				
2	90387–253M6	COLLAR	1	1				
3	20S–17151–00	GEAR, 5TH PINION (21T)	1	1				
4	90209–21332	WASHER	2	2				
5	93440–25186	CIRCLIP	2	2				
6	20S–17131–00	GEAR, 3RD PINION (18T/24T)	1	1				
7	90387–2513E	COLLAR	1	1				
8	20S–17161–00	GEAR, 6TH PINION (24T)	1	1				
9	90209–22352	WASHER	1	1				
10	90209–21351	WASHER	1	1				
11	20S–17121–00	GEAR, 2ND PINION (19T)	1	1				
12	20S–15163–00	HOUSING, BEARING 1	1	1				
13	93306–30525	BEARING	1	1				
14	93306–20483	BEARING	1	1				
15	90151–06024	SCREW, COUNTERSUNK	3	3				
16	4S8–17421–00	AXLE, DRIVE	1	1				
17	93306–30550	BEARING	1	1				
18	90387–2504A	COLLAR	1	1				
19	90387–2813C	COLLAR	1	1				
20	20S–17221–00	GEAR, 2ND WHEEL (37T)	1	1				
21	90209–25342	WASHER	3	3				
22	93440–28062	CIRCLIP	3	3				
23	20S–17261–00	GEAR, 6TH WHEEL (26T)	1	1				
24	90387–2813D	COLLAR	2	2				
25	20S–17241–00	GEAR, 4TH WHEEL (32T)	1	1				
26	90209–25349	WASHER	1	1				
27	90209–25350	WASHER	1	1				

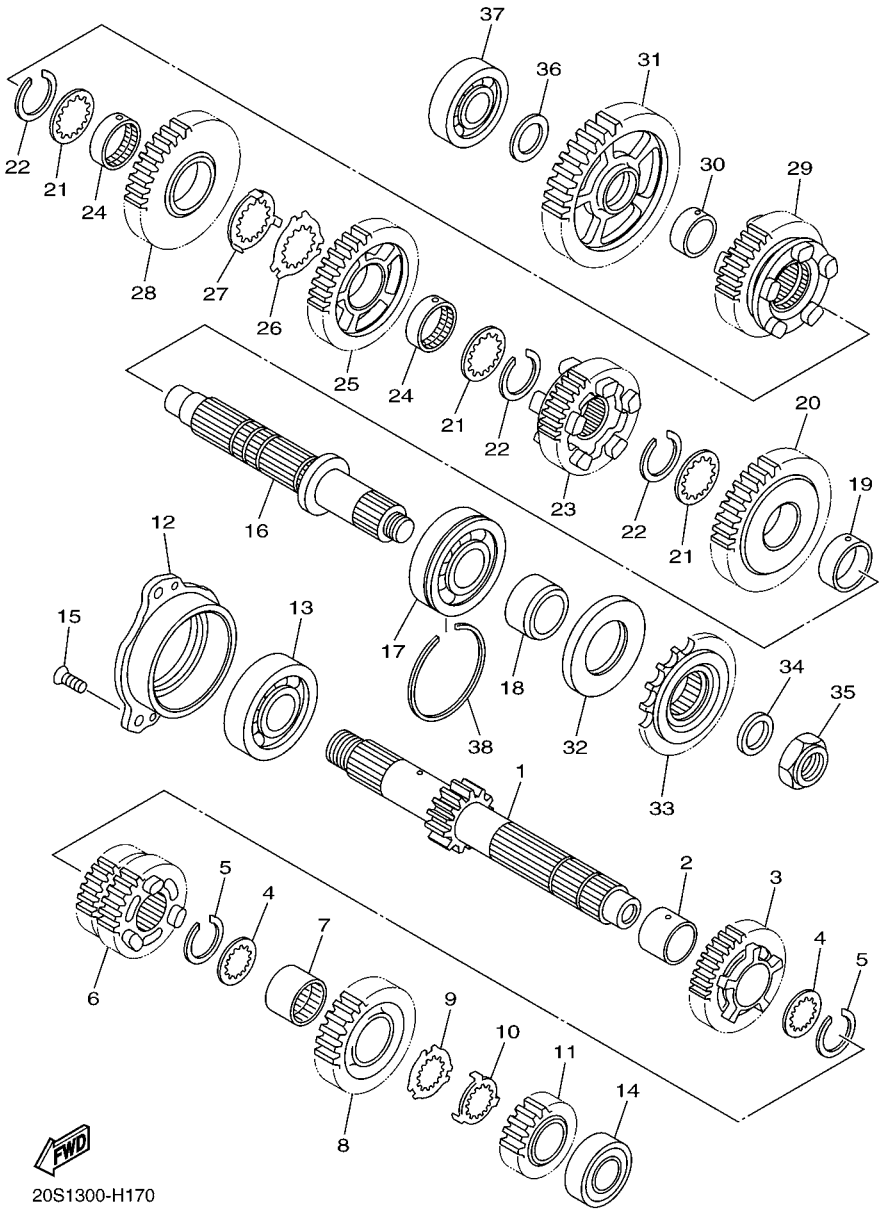

FIG. 17 TRANSMISSION

REF. NO.	PART NO.	DESCRIPTION	36P4	36P5				REMARKS
28	20S–17231–00	GEAR, 3RD WHEEL (28T)	1	1				
29	20S–17251–00	GEAR, 5TH WHEEL (25T)	1	1				
30	90387–2202V	COLLAR	1	1				
31	20S–17211–00	GEAR, 1ST WHEEL (37T)	1	1				
32	93102–35423	OIL SEAL	1	1				
33	20S–17460–00	SPROCKET, DRIVE (16T)	1	1				
34	90201–20023	WASHER, PLATE	1	1				
35	90179–20011	NUT	1	1				
36	90201–20278	WASHER, PLATE	1	1				
37	93306–20483	BEARING	1	1				
38	278–17424–01	CIRCLIP 1	1	1				

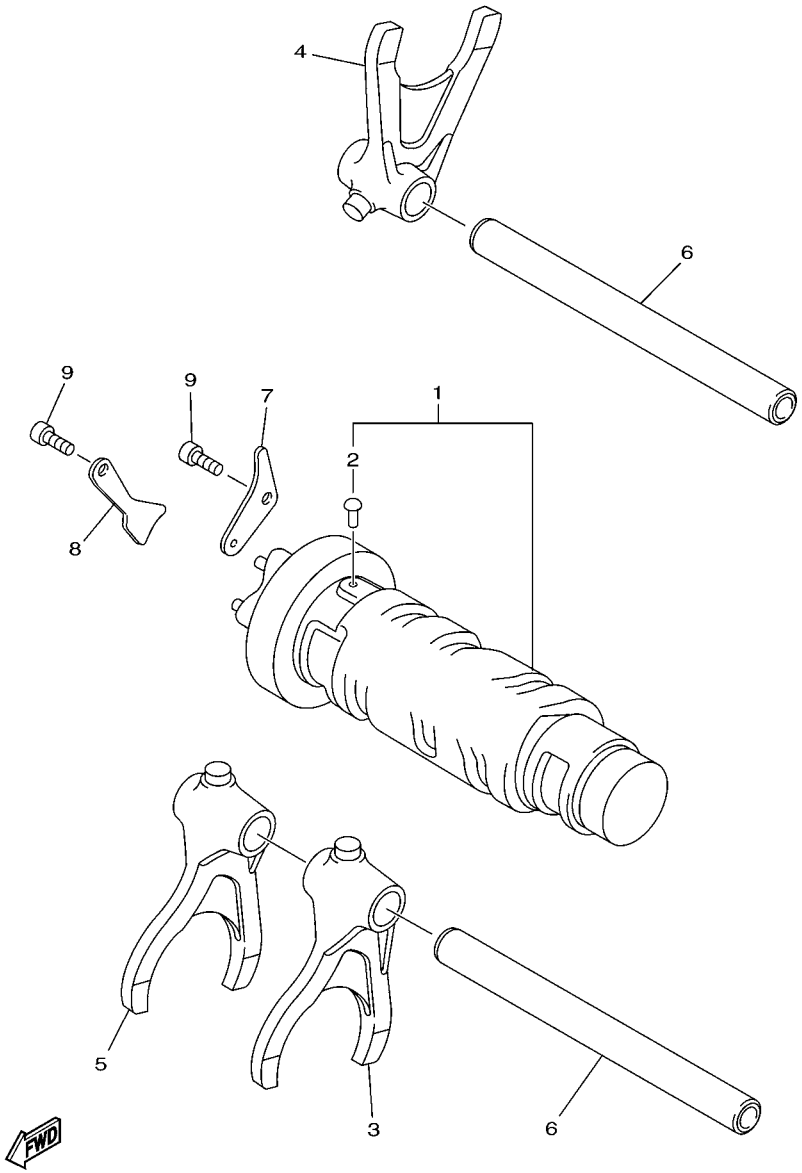

FIG. 18 SHIFT CAM & FORK

REF. NO.	PART NO.	DESCRIPTION	36P4	36P5				REMARKS
1	20S–18540–00	SHIFT CAM ASSY	1	1				
2	136–18542–00	.POINT, NEUTRAL	1	1				
3	20S–18511–00	FORK, SHIFT 1	1	1				
4	20S–18512–00	FORK, SHIFT 2	1	1				
5	20S–18513–00	FORK, SHIFT 3	1	1				
6	2C0–18535–00	BAR, SHIFT FORK GUIDE 2	2	2				
7	2C0–18536–00	STOPPER, SHIFT BAR	1	1				
8	2C0–18562–00	PLATE, STOPPER 2	1	1				
9	90110–06182	BOLT, HEXAGON SOCKET HEAD	2	2				

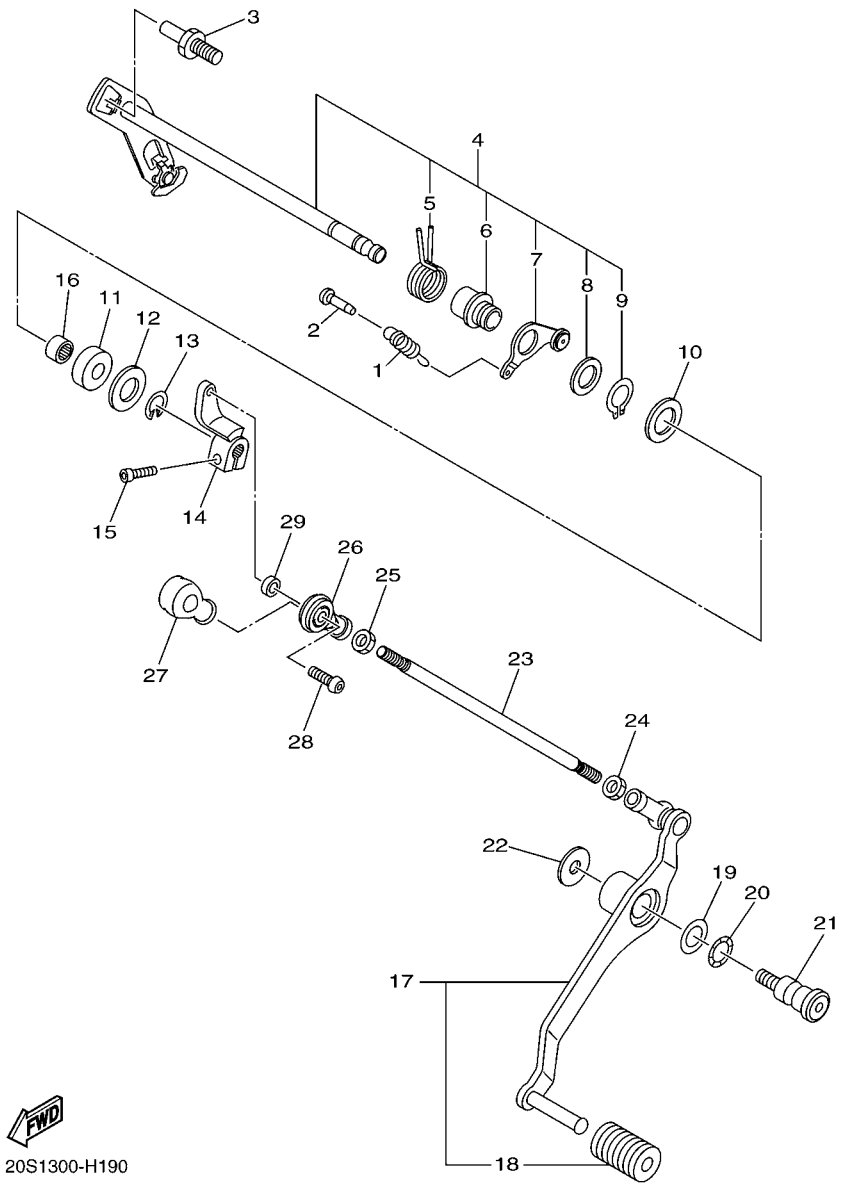

FIG. 19 SHIFT SHAFT

REF. NO.	PART NO.	DESCRIPTION	36P4	36P5				REMARKS
1	90506–15005	SPRING, TENSION	1	1				
2	132–16346–00	HOOK, SPRING	1	1				
3	1D7–18127–00	STOPPER, SCREW	1	1				
4	20S–18101–00	SHIFT SHAFT ASSY	1	1				
5	90508–32020	.SPRING, TORSION	1	1				
6	2C0–18175–00	.SPACER	1	1				
7	20S–18140–00	.STOPPER LEVER ASSY	1	1				
8	90201–177G4	.WASHER, PLATE	1	1				
9	99009–17400	.CIRCLIP	1	1				
10	90201–127E1	WASHER, PLATE	1	1				
11	93102–12106	OIL SEAL (SD 12-22-5 HS)	1	1				
12	90201–12575	WASHER, PLATE	1	1				
13	99001–10600	CIRCLIP	1	1				
14	20S–18112–00	ARM, SHIFT	1	1				
15	91312–06020	BOLT	1	1				
16	93317–11295	BEARING	1	1				
17	20S–18110–00	SHIFT PEDAL ASSY	1	1				
18	5EB–18113–00	.COVER, SHIFT PEDAL	1	1				
19	90201–12051	WASHER, PLATE	1	1				
20	90206–12005	WASHER, WAVE	1	1				
21	4BP–27434–01	BOLT	1	1				
22	90201–08053	WASHER, PLATE	1	1				
23	3D8–18115–00	ROD, SHIFT	1	1				
24	90170–06026	NUT	1	1				
25	95314–06700	NUT	1	1				
26	5VX–18116–00	JOINT, ROD 1	1	1				
27	5VX–18154–00	COVER, DUST	1	1				

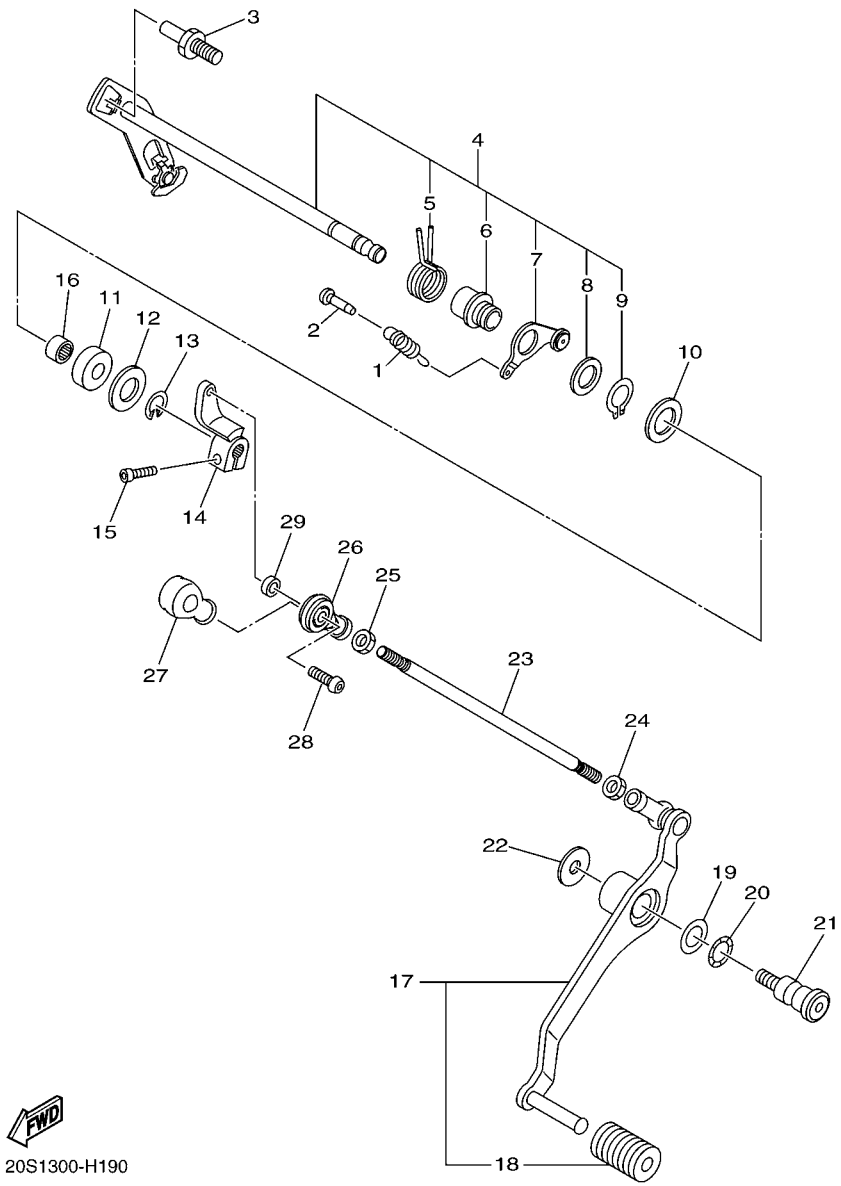

FIG. 19 SHIFT SHAFT

REF. NO.	PART NO.	DESCRIPTION	36P4	36P5				REMARKS
28	90111–06098	BOLT,HEX. SOCKET BUTTON	1	1				
29	90387–06372	COLLAR	1	1				

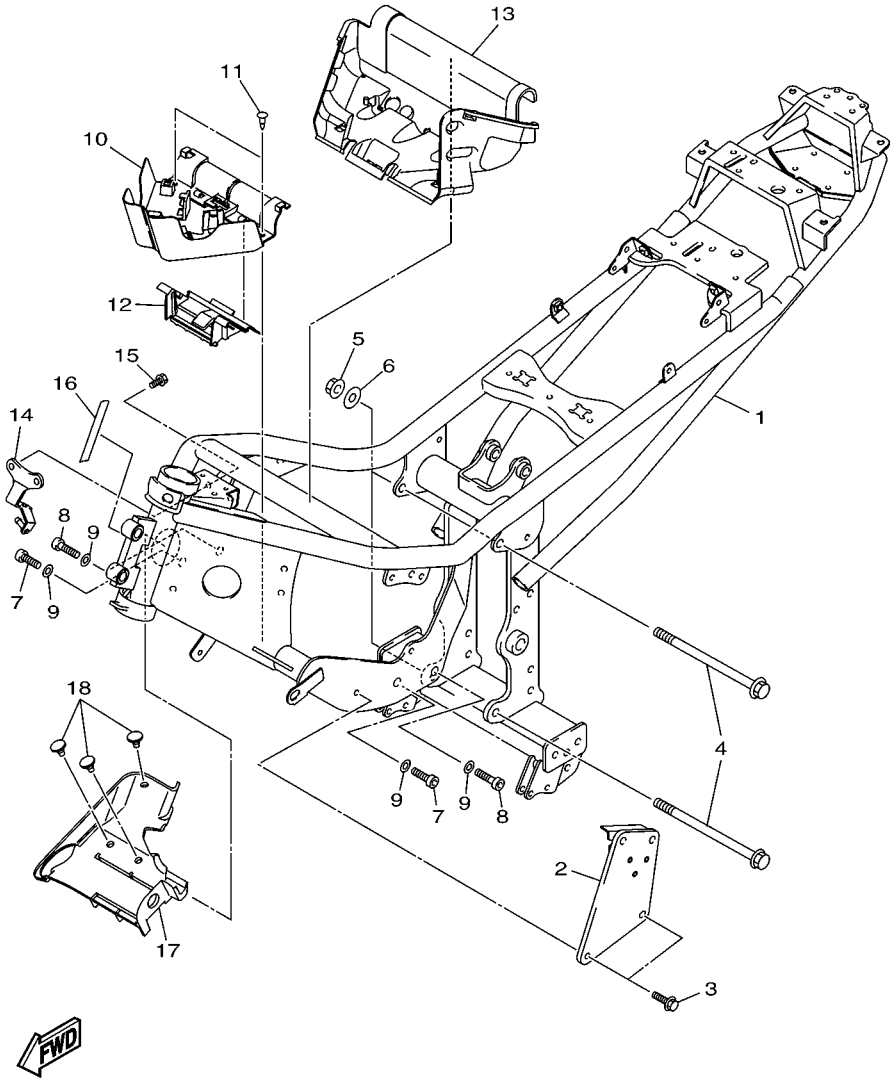

36P1110-H200

FIG. 20 FRAME

REF. NO.	PART NO.	DESCRIPTION	36P4	36P5				REMARKS
1	36P–21110–10	FRAME COMP.	1	1				
2	20S–21136–00	GUSSET	1	1				
3	95822–08020	BOLT, FLANGE	4	4				
4	90105–10297	BOLT, FLANGE	2	2				
5	90179–10658	NUT	2	2				
6	90201–10051	WASHER, PLATE	2	2				
7	91312–10035	BOLT	2	2				
8	91312–10045	BOLT	2	2				
9	90201–10030	WASHER, PLATE	4	4				
10	20S–2117N–00	COVER 3	1	1				
11	90269–07007	RIVET	2	2				
12	20S–2117R–00	COVER 4	1	1				
13	20S–2117T–00	COVER 5	1	1				
14	20S–21249–00	BRACKET	1	1				
15	95802–06010	BOLT, FLANGE	2	2				
16	3D8–2117G–00	PROTECTOR	1	1				
17	36P–2117U–00	COVER 6	1	1				
18	90269–05074	RIVET	3	3				

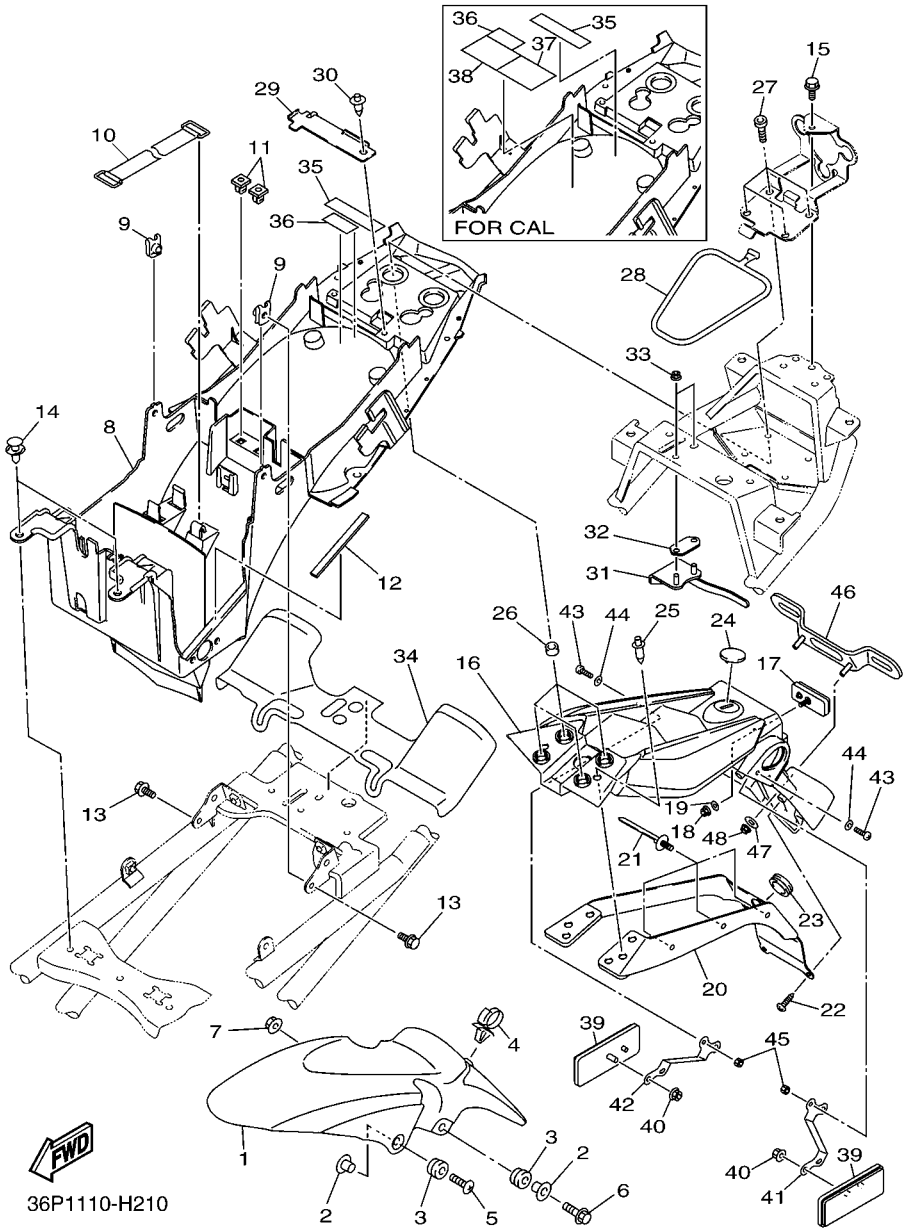

FIG. 21 FENDER

REF. NO.	PART NO.	DESCRIPTION	36P4	36P5				REMARKS
1	5VX–21511–A0–P1	FENDER, FRONT	1	1				UR FOR RYC1
	5VX–21511–A0–P4	FENDER, FRONT	1	1				UR FOR BWC1
2	90387–065J6	COLLAR	4	4				
3	90480–12072	GROMMET	4	4				
4	90464–18002	CLAMP	1	1				
5	90154–06061	SCREW, BINDING	2	2				
6	95024–06030	BOLT, FLANGE	2	2				
7	95702–06500	NUT, FLANGE	2	2				
8	20S–21611–00	FENDER, REAR	1	1				
9	90183–06053	NUT, SPRING	2	2				
10	120–82131–00	BAND, BATTERY	1	1				
11	90480–07003	GROMMET	2	2				
12	5JW–2174X–00	DAMPER	1	1				
13	95802–06012	BOLT, FLANGE	2	2				
14	90269–07010	RIVET	2	2				
15	95822–06010	BOLT, FLANGE	1	1				
16	20S–21629–10	GUARD, MUD	1	1				
17	3Y6–85130–02	REAR REFLECTOR ASSY	1	1				
18	95602–05100	NUT, U	1	1				
19	90201–05043	WASHER, PLATE	1	1				
20	20S–21688–00	BRACKET, REAR STAY	1	1				
21	90464–31001	CLAMP	3	3				
22	90160–05012	SCREW, ROUND TAPPING	4	4				
23	90480–23345	GROMMET	1	1				
24	8GC–2836B–01	TUNING FORK MARK	1	1				
25	90269–07001	RIVET	2	2				
26	90387–06232	COLLAR	4	4				

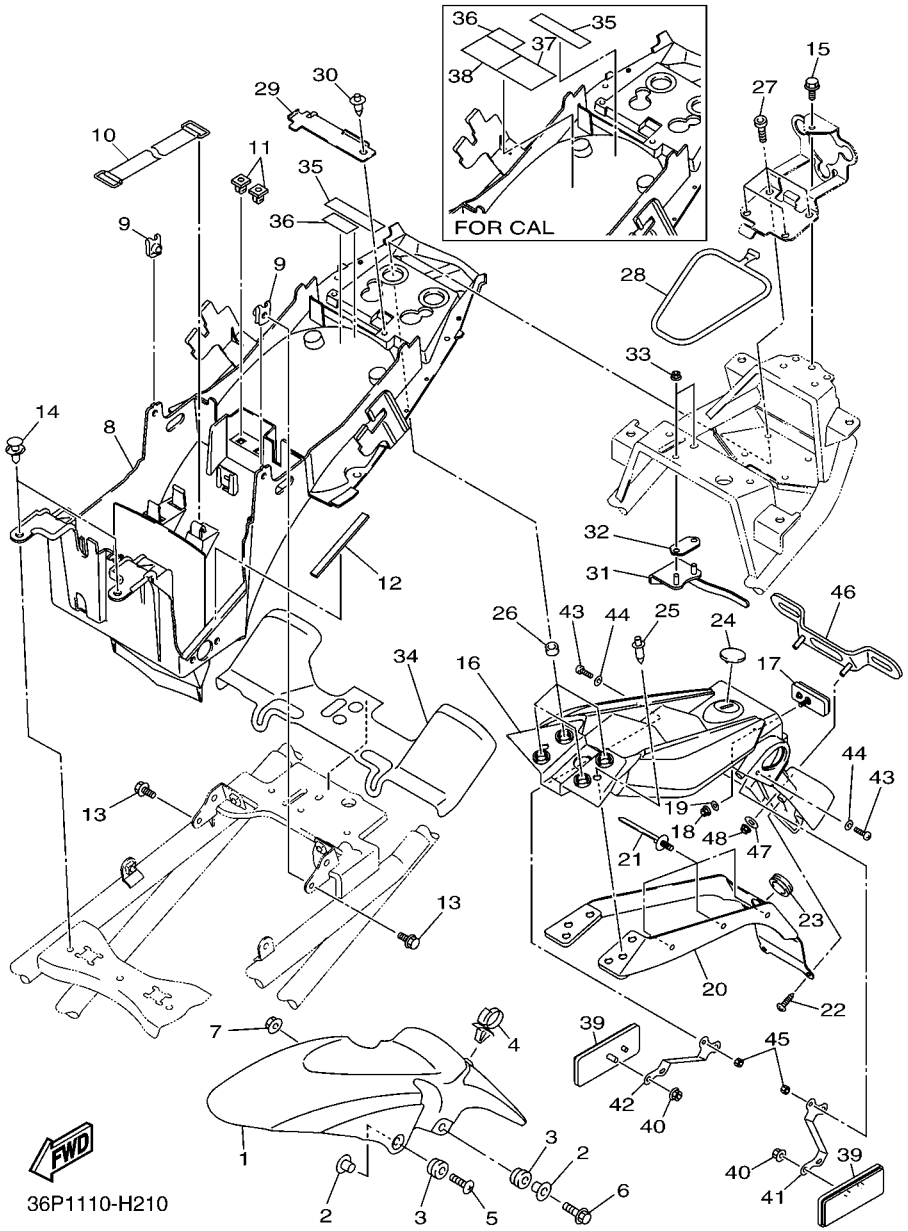

FIG. 21 FENDER

REF. NO.	PART NO.	DESCRIPTION	36P4	36P5				REMARKS
27	91312–08025	BOLT	4	4				
28	3YX–21376–00	BAND, TOOL	1	1				
29	20S–21677–00	PLATE,FITTING 3	1	1				
30	90269–06008	RIVET	1	1				
31	36P–2115J–00	BRACKET, HELMET HANGER	1	1				
32	20S–24792–00	PLATE	1	1				
33	95702–06500	NUT, FLANGE	2	2				
34	36P–21639–00	DAMPER 2	1	1				
35	3JJ–28446–A1	LABEL, CAUTION	1	1				
36	3TB–24877–A0	LABEL, CAUTION	1	1				
37	5VX–21684–00	PLATE, ROUTING		1				FOR CALIFORNIA
38	5VX–2178A–00	LABEL		1				FOR CALIFORNIA
39	3Y6–85130–02	REAR REFLECTOR ASSY	2	2				
40	95602–05200	NUT, SELF-LOCKING	2	2				
41	36P–2164F–00	STAY 1	1	1				
42	36P–2164G–00	STAY 2	1	1				
43	98502–04012	SCREW, PAN HEAD	4	4				
44	92902–04600	WASHER, PLATE	4	4				
45	95602–04100	NUT, U	4	4				
46	5MT–84751–00	BRACKET, LICENSE	1	1				
47	90201–06088	WASHER, PLATE	2	2				
48	95602–06100	NUT, U	2	2				

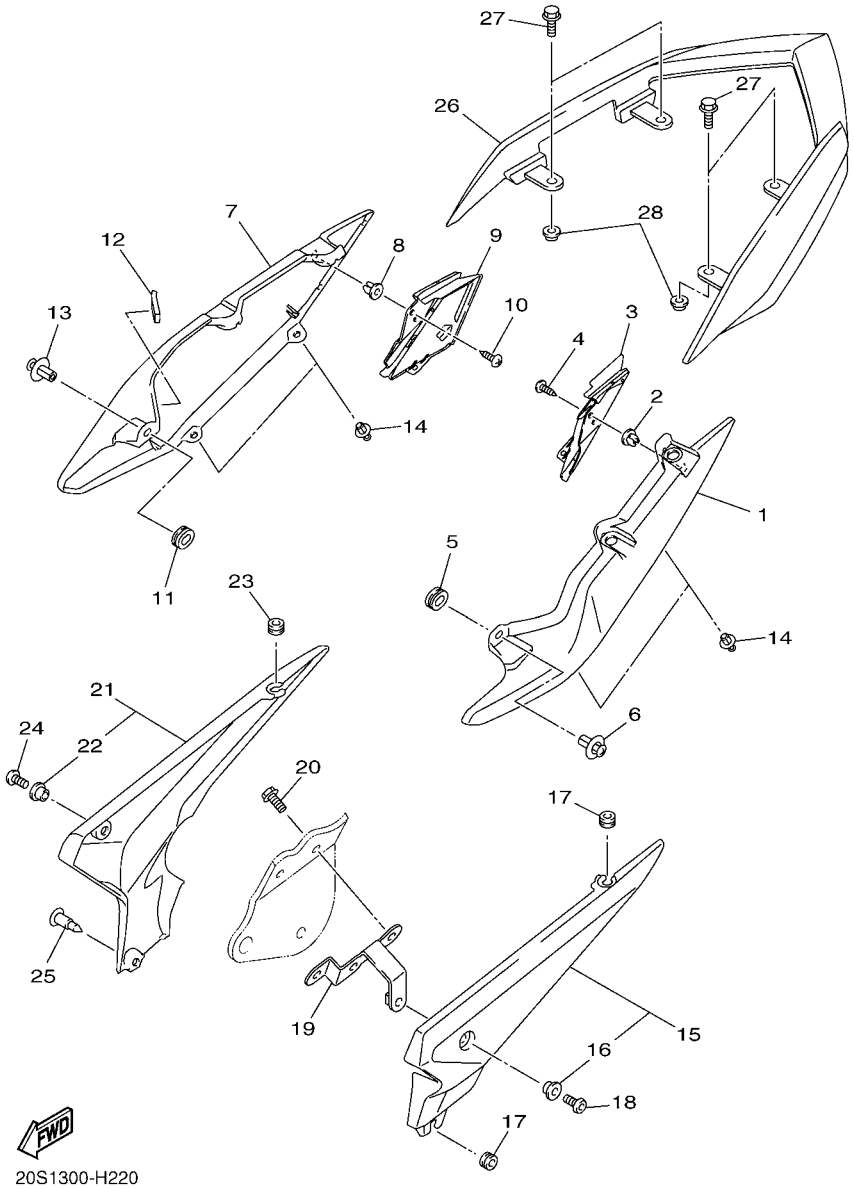

FIG. 22 SIDE COVER

REF. NO.	PART NO.	DESCRIPTION	36P4	36P5				REMARKS
1	20S–21711–00–P4	COVER, SIDE 1	1	1				UR FOR RYC1
	20S–21711–00–P5	COVER, SIDE 1	1	1				UR FOR BWC1
2	90480–08005	GROMMET	1	1				
3	20S–2163A–00	COVER, REAR FENDER 1	1	1				
4	97702–50014	SCREW, TAPPING	1	1				
5	5PW–2174X–00	DAMPER	1	1				
6	90269–07076	RIVET	1	1				
7	20S–21721–00–P4	COVER, SIDE 2	1	1				UR FOR RYC1
	20S–21721–00–P5	COVER, SIDE 2	1	1				UR FOR BWC1
8	90480–08005	GROMMET	1	1				
9	20S–2163E–00	COVER, REAR FENDER 2	1	1				
10	97702–50014	SCREW, TAPPING	1	1				
11	5PW–2174X–00	DAMPER	1	1				
12	4C8–24182–00	DAMPER, LOCATING 2	1	1				
13	90269–07076	RIVET	1	1				
14	90269–07077	RIVET	4	4				
15	20S–21730–00	SIDE COVER ASSY 3	1	1				
16	90387–06130	.COLLAR	1	1				
17	90480–10334	GROMMET	2	2				
18	90111–06038	BOLT,HEX. SOCKET BUTTON	1	1				
19	20S–2172U–00	BRKT 7	1	1				
20	95802–06012	BOLT, FLANGE	2	2				
21	20S–21740–00	SIDE COVER ASSY 4	1	1				
22	90387–06130	.COLLAR	1	1				
23	90480–10334	GROMMET	1	1				
24	90111–06038	BOLT,HEX. SOCKET BUTTON	1	1				
25	90269–07008	RIVET	1	1				

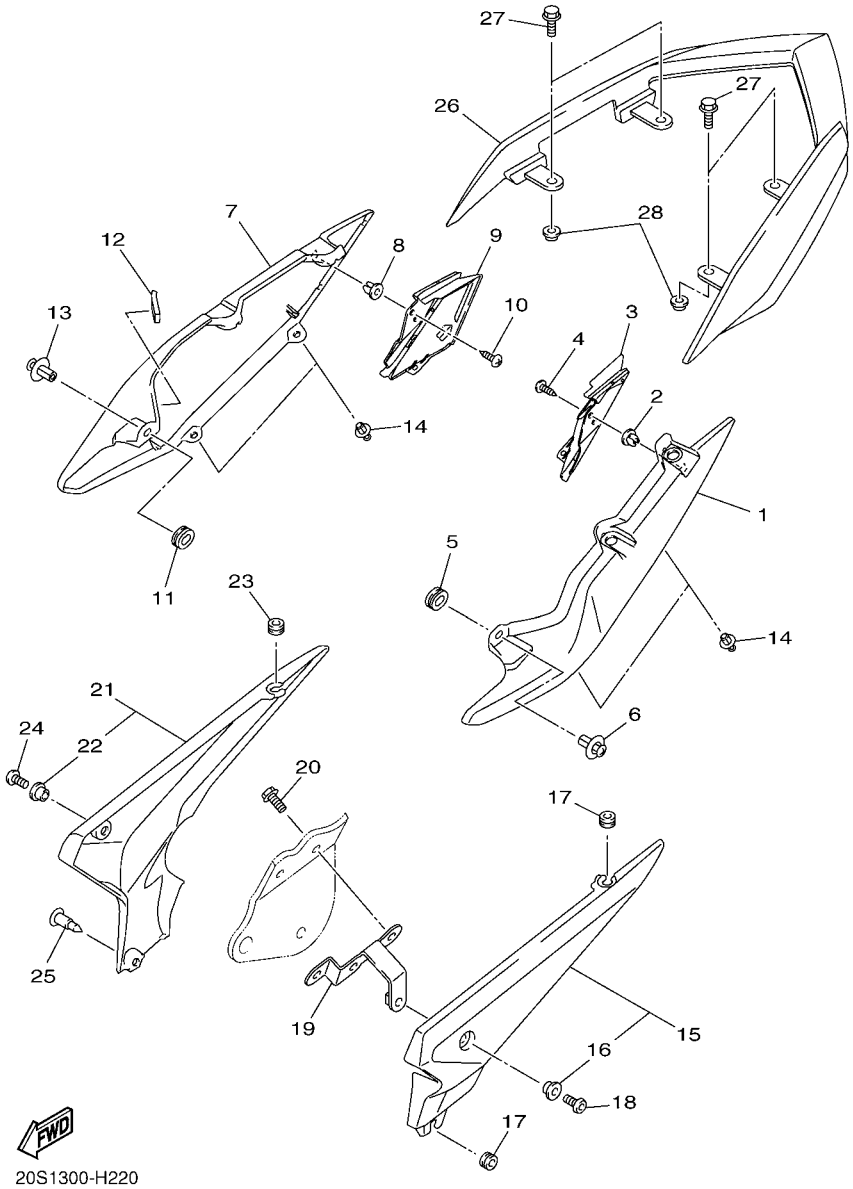

FIG. 22 SIDE COVER

REF. NO.	PART NO.	DESCRIPTION	36P4	36P5				REMARKS
26	20S–24773–00	HANDLE, SEAT	1	1				
27	92012–08020	BOLT, BUTTON HEAD	4	4				
28	90387–08089	COLLAR	4	4				

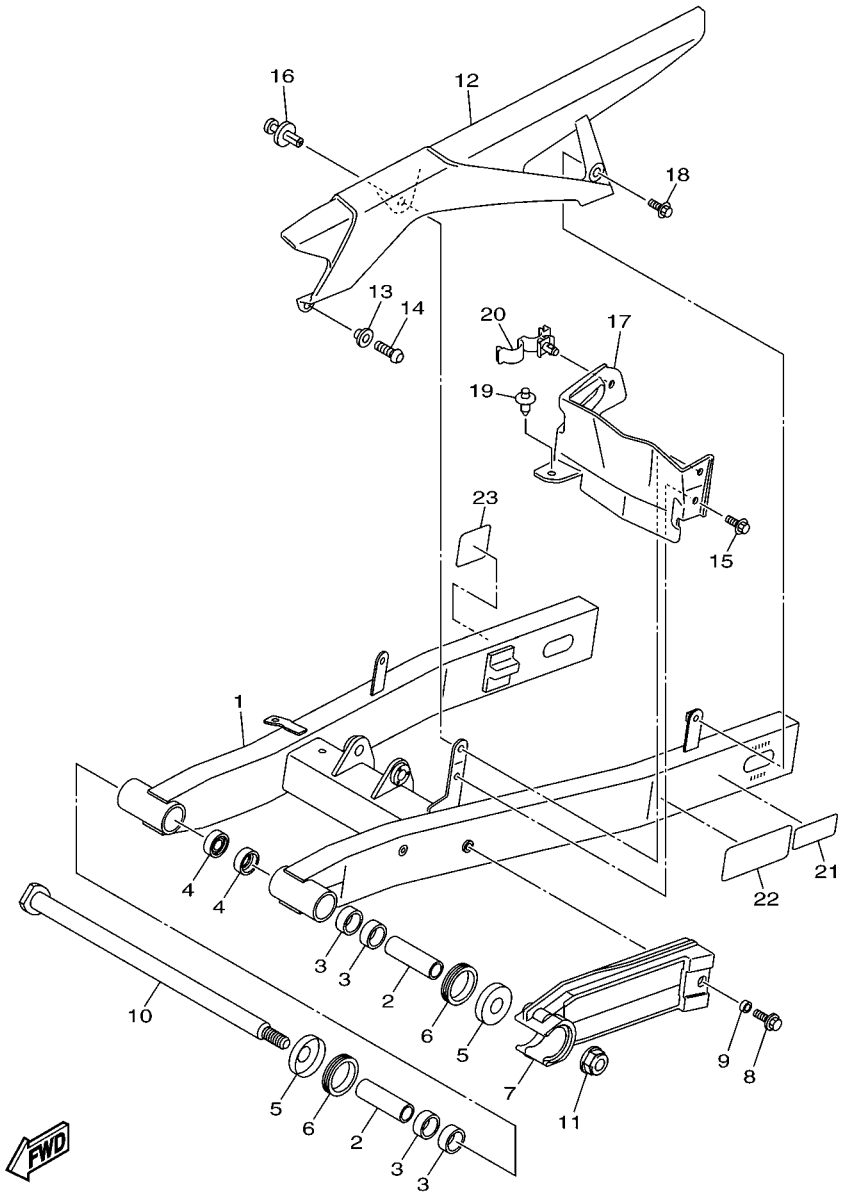

36P1110-H230

FIG. 23 REAR ARM

REF. NO.	PART NO.	DESCRIPTION	36P4	36P5				REMARKS
1	20S–22110–00	REAR ARM COMP.	1	1				
2	5VK–22124–00	BUSH 2	2	2				
3	93317–22262	BEARING	4	4				
4	93106–22019	OIL SEAL (DC 22-28-8)	2	2				
5	30X–2219X–00	COVER	2	2				
6	93108–35004	OIL SEAL (35-41-8)	2	2				
7	20S–22151–00	SEAL, GUARD	1	1				
8	90119–06147	BOLT, WITH WASHER	1	1				
9	90387–06133	COLLAR	1	1				
10	1AE–22141–00	SHAFT, PIVOT	1	1				
11	90185–14012	NUT, SELF-LOCKING	1	1				
12	20S–22311–00	CASE, CHAIN	1	1				
13	90387–06130	COLLAR	1	1				
14	92012–06020	BOLT, BUTTON HEAD	1	1				
15	90119–06154	BOLT, WITH WASHER	1	1				
16	90269–07076	RIVET	1	1				
17	20S–22325–01	COVER, DUST	1	1				
18	90119–06154	BOLT, WITH WASHER	1	1				
19	90269–08001	RIVET	1	1				
20	90464–16011	CLAMP	1	1				
21	3XW–21668–A1	LABEL, TIRE	1	1				
22	36P–2179W–00	PLATE, EPA (NON CALIFORNIA)	1					
	36P–2176P–00	PLATE, EPA (CALIFORNIA)		1				FOR CALIFORNIA
23	5SL–21686–00	PLATE, ROUTING 2		1				FOR CALIFORNIA

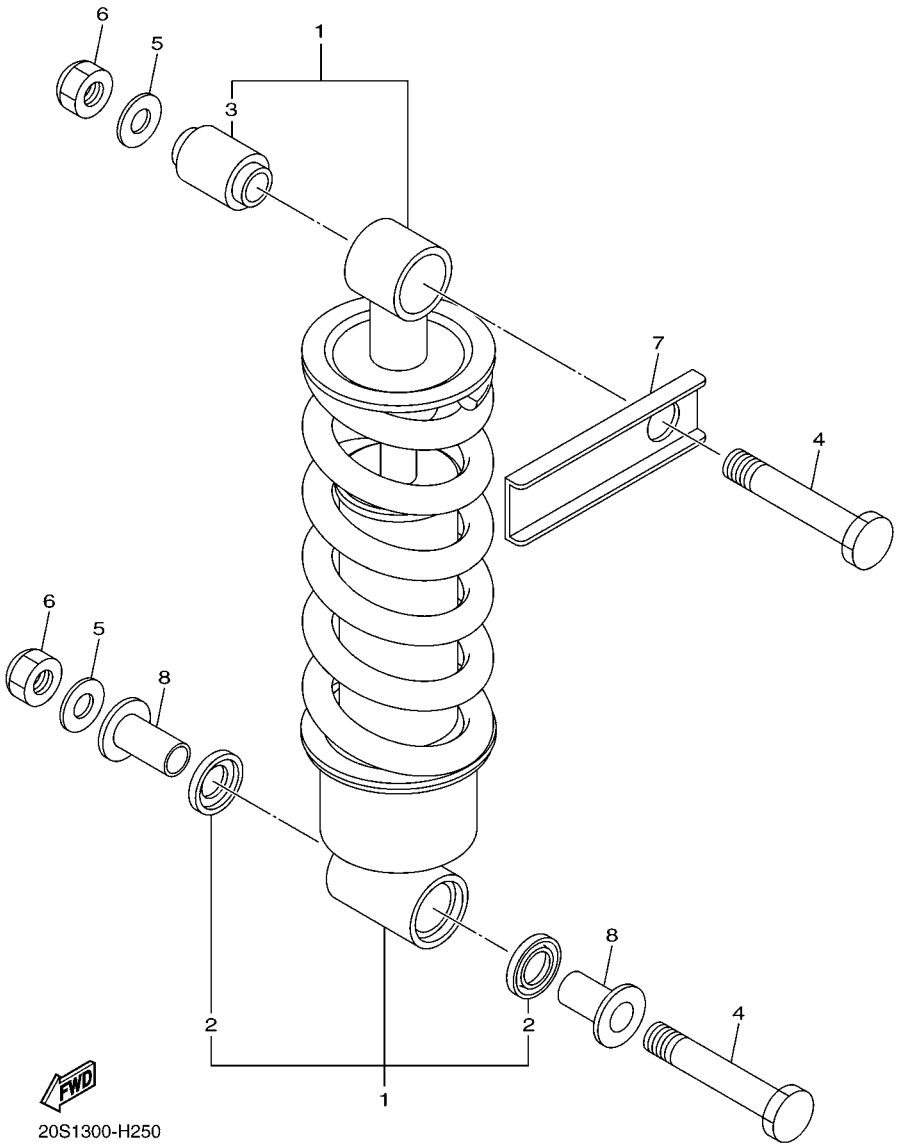

FIG. 24 REAR SUSPENSION

REF. NO.	PART NO.	DESCRIPTION	36P4	36P5				REMARKS
1	20S–22210–10	SHOCK ABSORBER ASSY, REAR	1	1				
2	93109–18020	.OIL SEAL	2	2				
3	34L–22216–00	.BUSH, REAR SHOCK ABSORBER	1	1				
4	90109–125F1	BOLT	2	2				
5	90201–12050	WASHER, PLATE	2	2				
6	95612–12100	NUT, U	2	2				
7	20S–22243–00	WASHER 1	1	1				
8	90387–123X6	COLLAR	2	2				

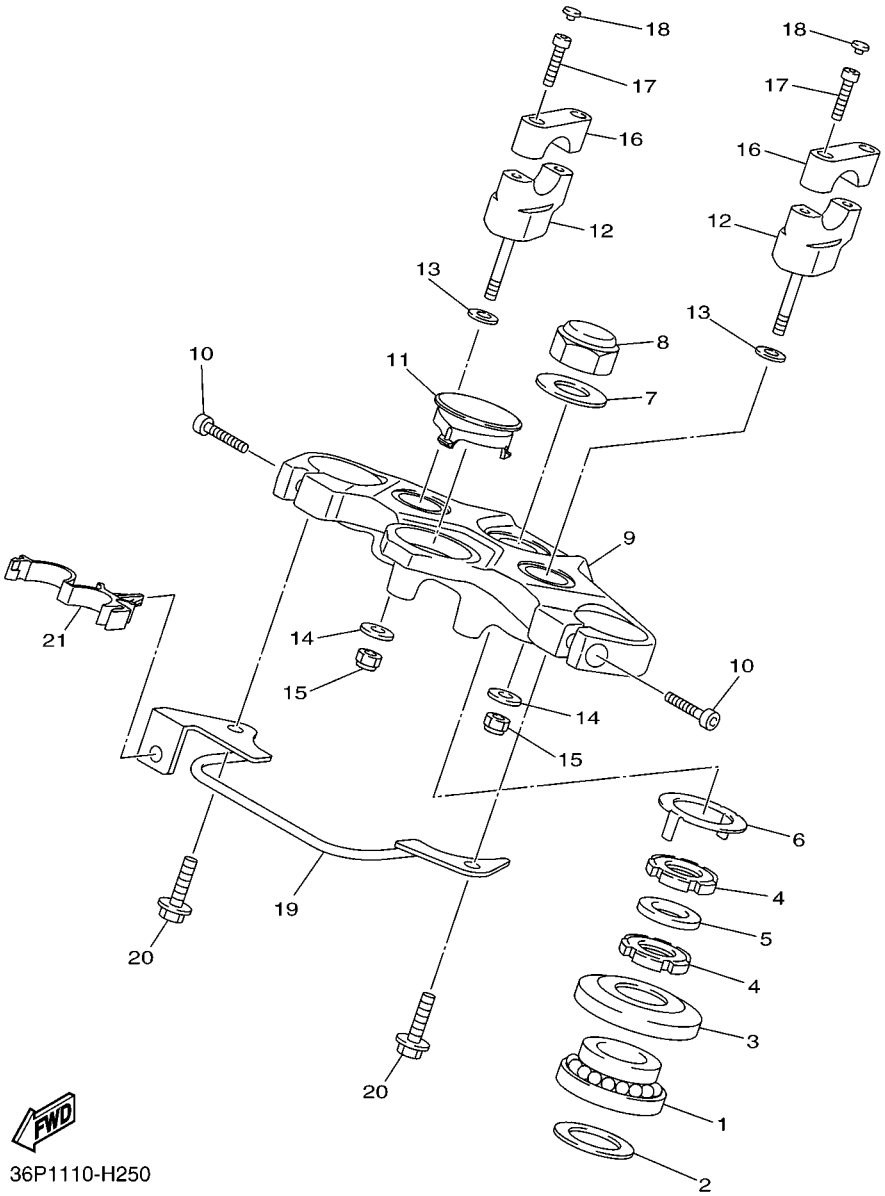

36P1110-H250

FIG. 25 STEERING

REF. NO.	PART NO.	DESCRIPTION	36P4	36P5				REMARKS
1	93399–99931	BEARING	1	1				
2	90202–24190	WASHER, PLATE	1	1				
3	1W1–23416–00	COVER, BALL RACE 2	1	1				
4	90179–25033	NUT	2	2				
5	90202–26142	WASHER, PLATE	1	1				
6	26H–23418–01	WASHER, SPECIAL	1	1				
7	90201–220T0	WASHER, PLATE	1	1				
8	90176–22081	NUT, CROWN	1	1				
9	20S–W2341–10	CROWN, HANDLE	1	1				
10	91312–08030	BOLT	2	2				
11	36P–82552–00	CAP, SWITCH	1	1				
12	5LV–23442–01	HOLDER, HANDLE LOWER	2	2				
13	92907–10200	WASHER, PLAIN	2	2				
14	90201–10141	WASHER, PLATE	2	2				
15	95602–10100	NUT, U	2	2				
16	4H7–23441–01–98	HOLDER, HANDLE UPPER	2	2				LGB
17	91312–08030	BOLT	4	4				
18	341–23469–00	CAP, BOLT	4	4				
19	36P–23318–00	HOLDER, CABLE 1	1	1				
20	95802–06012	BOLT, FLANGE	2	2				
21	90464–16006	CLAMP	1	1				

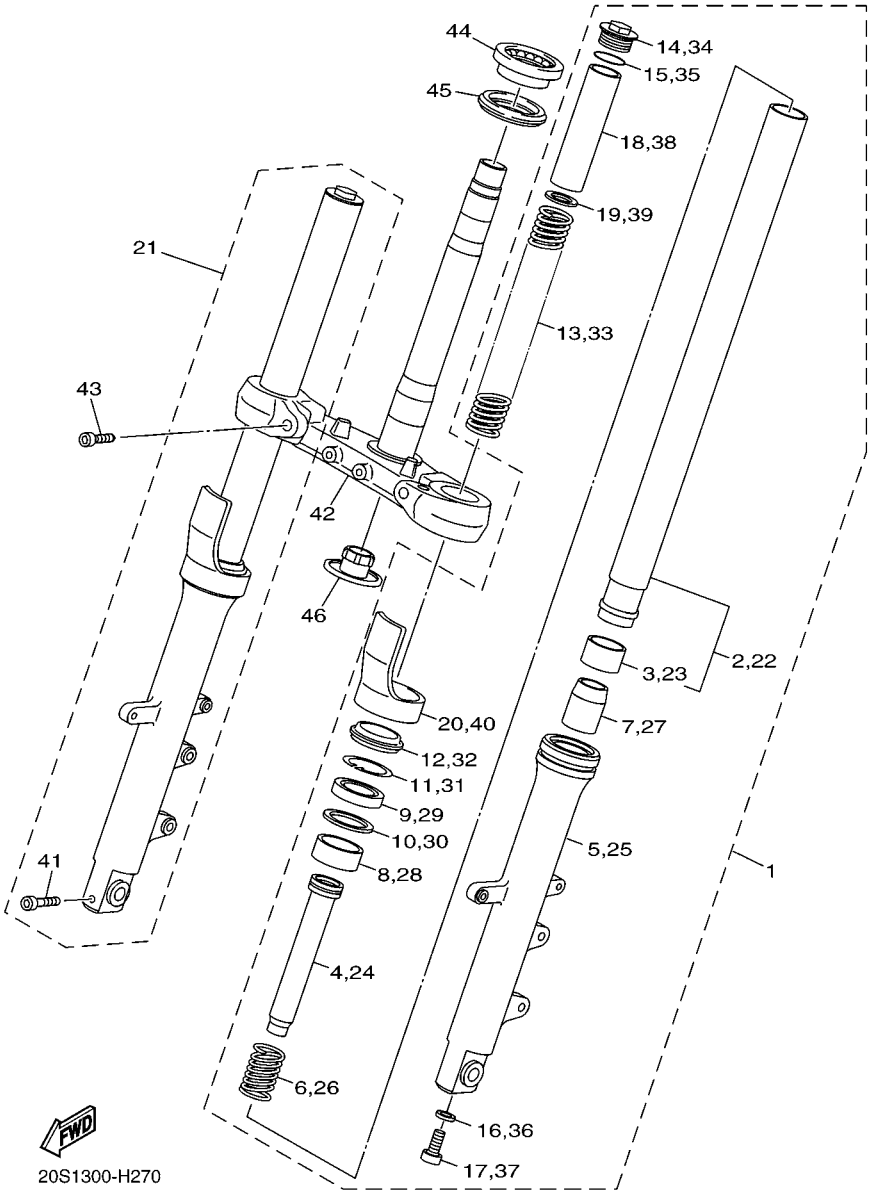

FIG. 26 FRONT FORK

REF. NO.	PART NO.	DESCRIPTION	36P4	36P5				REMARKS
1	20S–23102–00	FRONT FORK ASSY (L.H)	1	1				
2	20S–23110–00	.INNER TUBE COMP.1	1	1				
3	3VD–23135–10	..METAL, SLIDE 2	1	1				
4	20S–23170–00	.CYLINDER COMP., FRONT FORK	1	1				
5	20S–23126–00	.TUBE, OUTER (LEFT)	1	1				
6	3VD–23151–00	.SPRING, REBOUND	1	1				
7	5VU–23173–00	.SPINDLE, TAPER	1	1				
8	3VD–23125–10	.METAL, SLIDE 1	1	1				
9	5VU–23145–00	.OIL SEAL	1	1				
10	3VD–23115–00	.GUIDE, COVER UPPER	1	1				
11	3VD–23156–00	.RING, SNAP	1	1				
12	3VD–23144–00	.SEAL, DUST	1	1				
13	20S–23141–00	.SPRING, FRONT FORK	1	1				
14	5VU–2311H–00	.FORK BOLT	1	1				
15	93210–35N02	.O-RING	1	1				
16	90430–10171	.GASKET	1	1				
17	90110–10N52	.BOLT, HEXAGON SOCKET HEAD	1	1				
18	5VU–23118–00	.SPACER	1	1				
19	5VU–23142–00	.SEAT, SPRING UPPER	1	1				
20	4TX–2331G–00	.COVER	1	1				
21	20S–23103–00	FRONT FORK ASSY (R.H)	1	1				
22	20S–23110–00	.INNER TUBE COMP.1	1	1				
23	3VD–23135–10	..METAL, SLIDE 2	1	1				
24	20S–23170–00	.CYLINDER COMP., FRONT FORK	1	1				
25	20S–23136–00	.TUBE, OUTER (RIGHT)	1	1				
26	3VD–23151–00	.SPRING, REBOUND	1	1				
27	5VU–23173–00	.SPINDLE, TAPER	1	1				

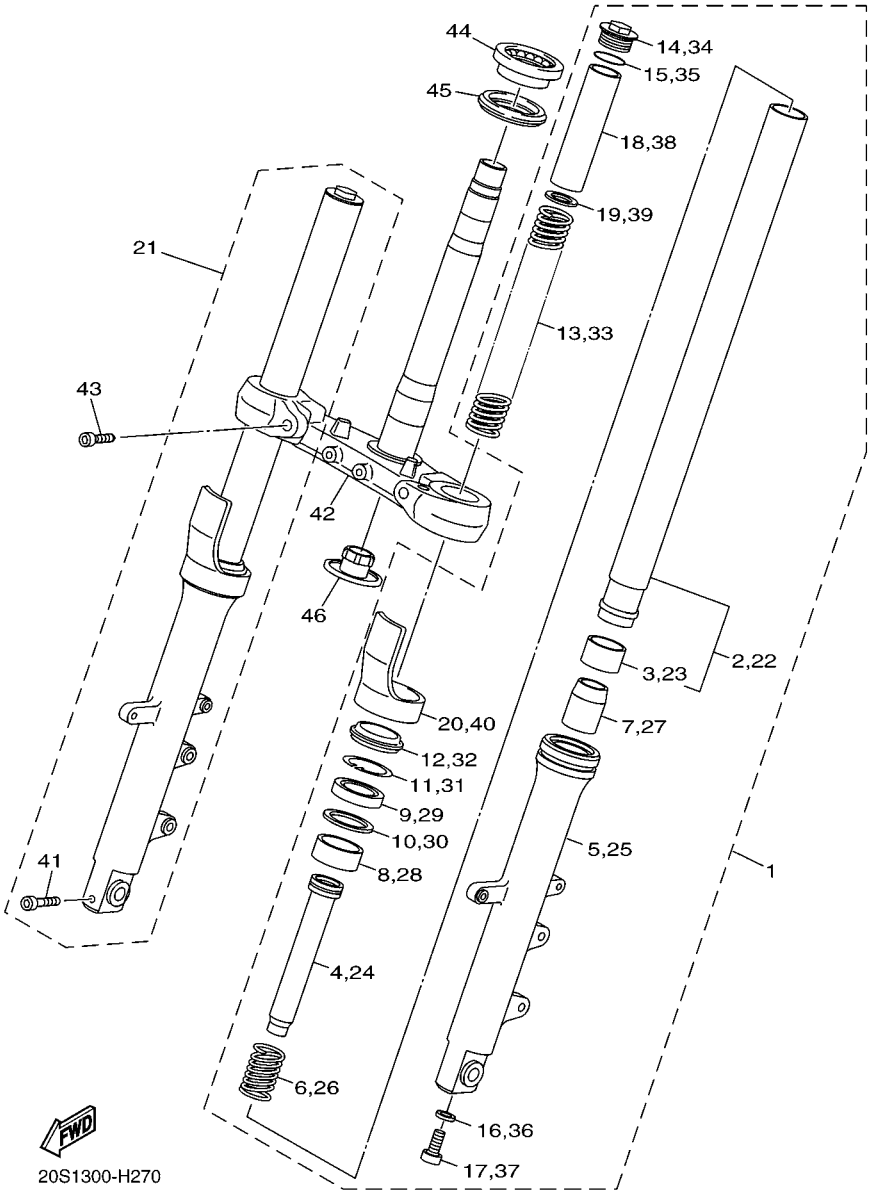

FIG. 26 FRONT FORK

REF. NO.	PART NO.	DESCRIPTION	36P4	36P5				REMARKS
28	3VD–23125–10	.METAL, SLIDE 1	1	1				
29	5VU–23145–00	.OIL SEAL	1	1				
30	3VD–23115–00	.GUIDE, COVER UPPER	1	1				
31	3VD–23156–00	.RING, SNAP	1	1				
32	3VD–23144–00	.SEAL, DUST	1	1				
33	20S–23141–00	.SPRING, FRONT FORK	1	1				
34	5VU–2311H–00	.FORK BOLT	1	1				
35	93210–35N02	.O-RING	1	1				
36	90430–10171	.GASKET	1	1				
37	90110–10N52	.BOLT, HEXAGON SOCKET HEAD	1	1				
38	5VU–23118–00	.SPACER	1	1				
39	5VU–23142–00	.SEAT, SPRING UPPER	1	1				
40	4TX–2331G–00	.COVER	1	1				
41	91314–08040	.BOLT, HEXAGON SOCKET HEAD	1	1				
42	20S–23340–10	UNDER BRACKET COMP.	1	1				
43	91312–10025	BOLT	2	2				
44	93399–99932	BEARING	1	1				
45	3FV–23462–00	SEAL, STEERING	1	1				
46	4KM–23123–01	COVER, UNDER 1	1	1				

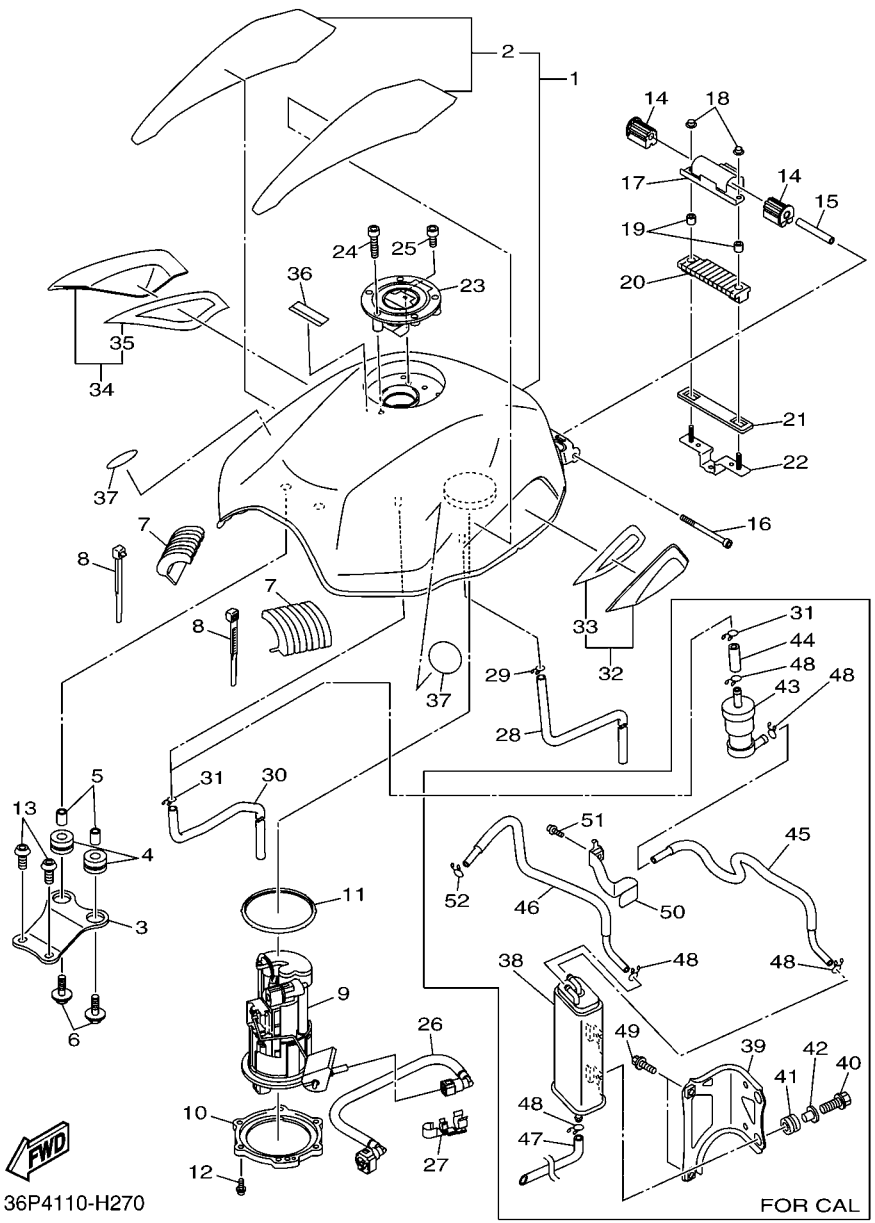

FIG. 27 FUEL TANK

REF. NO.	PART NO.	DESCRIPTION	36P4	36P5				REMARKS
1	20S–YK241–00–P1	FUEL TANK COMP.	1	1				UR FOR RYC1
	20S–Y2410–00–04	FUEL TANK COMP.	1	1				UR FOR BWC1
2	36P–24240–00	.GRAPHIC SET	1	1				FOR BWC1
3	20S–24191–00	BRACKET, FUEL TANK 1	1	1				
4	90480–16010	GROMMET	2	2				
5	90387–06068	COLLAR	2	2				
6	90119–06062	BOLT, WITH WASHER	2	2				
7	20S–24183–00	DAMPER, LOCATING 3	2	2				
8	90465–15011	CLAMP	4	4				
9	20S–13907–00	FUEL PUMP COMP.	1	1				
10	13S–24491–00	BRACKET, FUEL PUMP	1	1				
11	5JW–24486–00	O-RING	1	1				
12	90110–05028	BOLT, HEXAGON SOCKET HEAD	6	6				
13	90111–06127	BOLT,HEX. SOCKET BUTTON	2	2				
14	5VX–24181–00	DAMPER, LOCATING 1	2	2				
15	90387–061W6	COLLAR	1	1				
16	91312–06090	BOLT	1	1				
17	20S–2413Y–00	BRACKET, TANK FITTING	1	1				
18	95702–06500	NUT, FLANGE	2	2				
19	90387–06299	COLLAR	2	2				
20	20S–24181–00	DAMPER, LOCATING 1	1	1				
21	20S–2414H–00	DAMPER, PLATE 1	1	1				
22	20S–21296–00	NUT	1	1				
23	5JJ–24602–00	CAP ASSY	1	1				
24	90110–05112	BOLT, HEXAGON SOCKET HEAD	3	3				
25	91317–05010	BOLT	1	1				
26	5VX–13971–00	PIPE, FUEL 1	1	1				

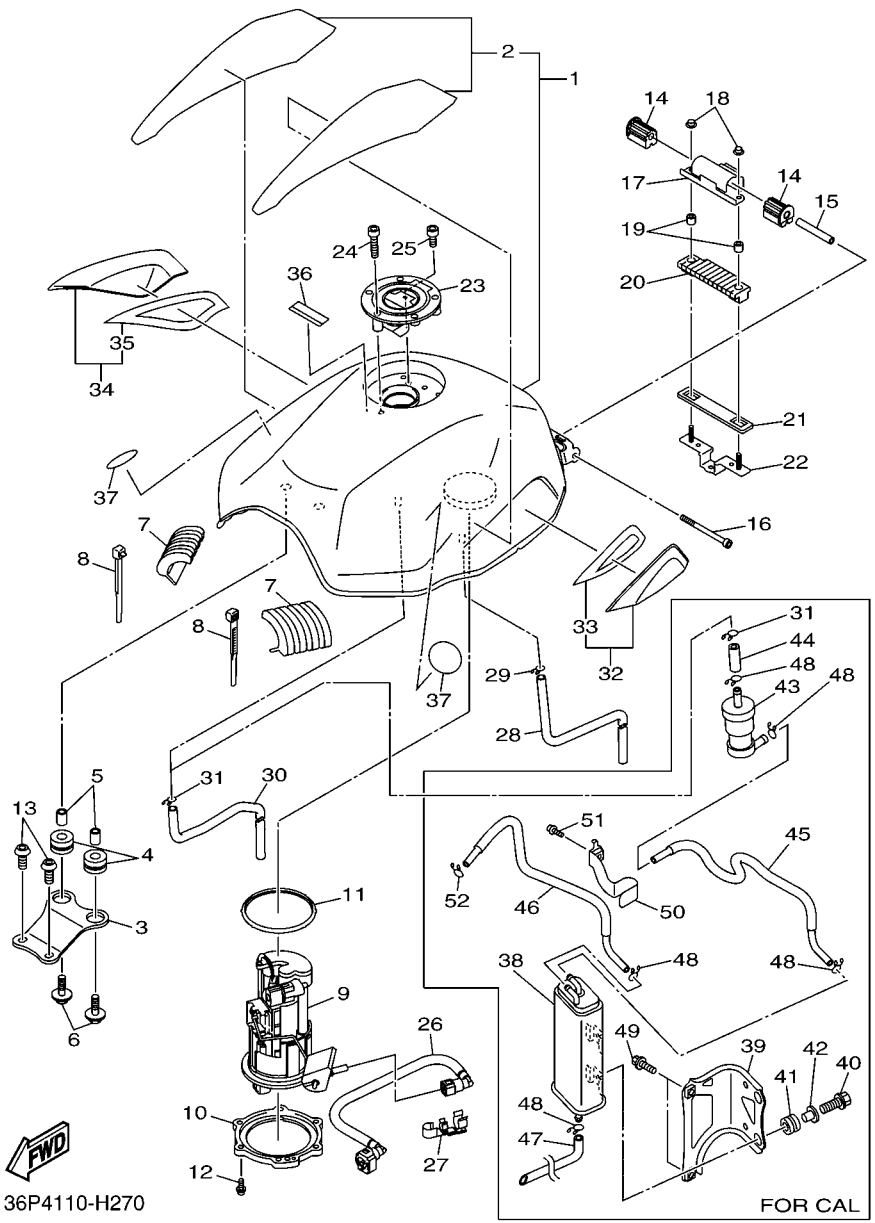

FIG. 27 FUEL TANK

REF. NO.	PART NO.	DESCRIPTION	36P4	36P5				REMARKS
27	90464–16005	CLAMP	1	1				
28	90445–106J2	HOSE (L650)	1	1				
29	90467–090A2	CLIP	1	1				
30	90445–106J2	HOSE (L650)	1					
31	90467–090A2	CLIP	1					
	90467–100A1	CLIP		1				FOR CALIFORNIA
32	20S–24106–00	TANK SIDE COVER ASSY 1	1	1				
33	20S–2173T–00	.TAPE 1	1	1				
34	20S–24108–00	TANK SIDE COVER ASSY 2	1	1				
35	20S–2173U–00	.TAPE 2	1	1				
36	5GK–2118K–00	LABEL, CAUTION		1				FOR CALIFORNIA
37	5JW–2413B–00	EMBLEM	2	2				
38	5C7–24170–00	CANISTER ASSY		1				FOR CALIFORNIA
39	36P–2419F–00	BRACKET, CANISTOR		1				FOR CALIFORNIA
40	95802–06016	BOLT, FLANGE		2				FOR CALIFORNIA
41	90480–13163	GROMMET		2				FOR CALIFORNIA
42	90387–062L2	COLLAR		2				FOR CALIFORNIA
43	5RB–24180–00	ROLL OVER VALVE ASSY		1				FOR CALIFORNIA
44	90445–11065	HOSE (L30)		1				FOR CALIFORNIA
45	36P–24314–00	PIPE 4		1				FOR CALIFORNIA
46	36P–14466–00	PIPE		1				FOR CALIFORNIA
47	36P–24315–00	PIPE 5		1				FOR CALIFORNIA
48	90467–100A1	CLIP		5				FOR CALIFORNIA
49	95802–08016	BOLT, FLANGE		2				FOR CALIFORNIA
50	36P–24667–00	GUIDE, PIPE		1				FOR CALIFORNIA
51	95802–06010	BOLT, FLANGE		1				FOR CALIFORNIA
52	90467–100A1	CLIP		1				FOR CALIFORNIA

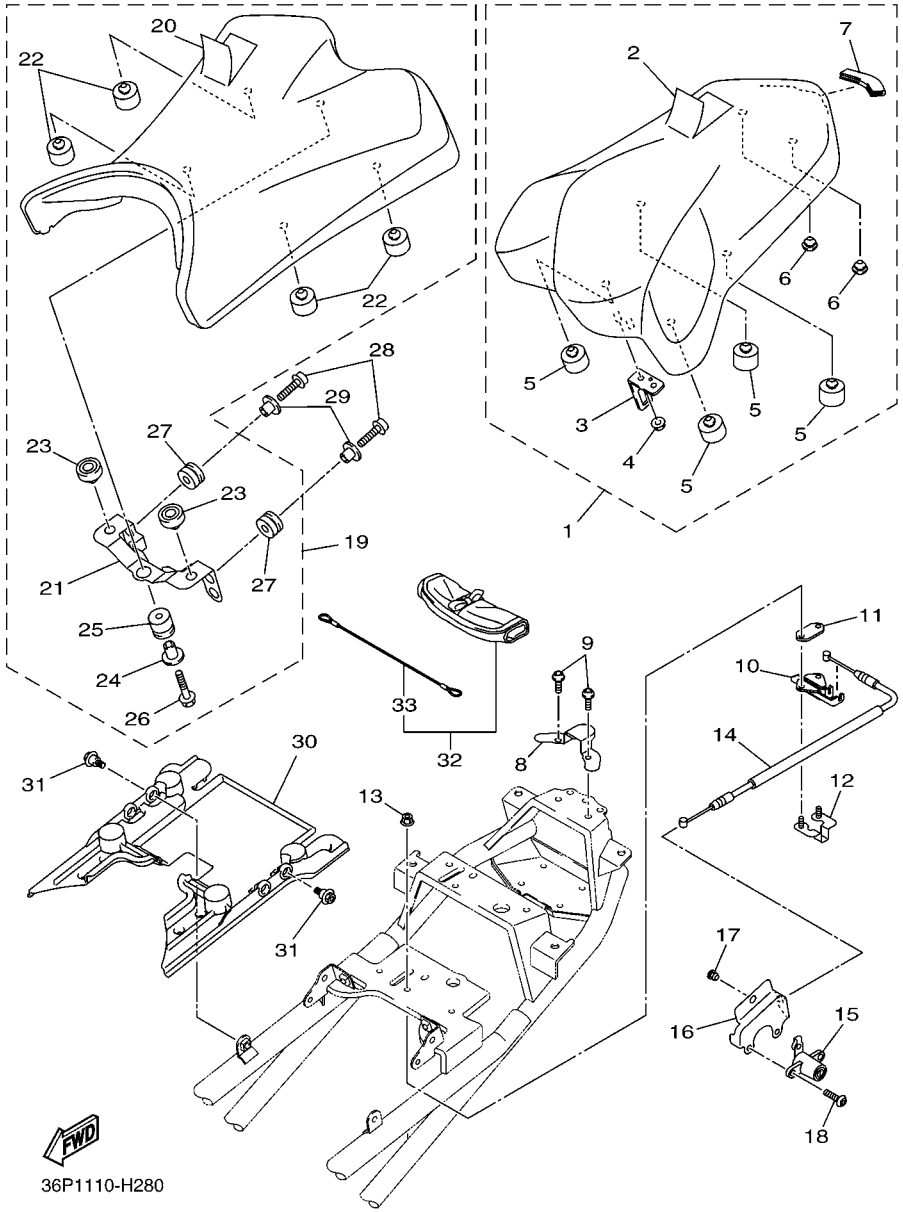

FIG. 28 SEAT

REF. NO.	PART NO.	DESCRIPTION	36P4	36P5				REMARKS
1	36P–24750–00	TANDEM SEAT ASSY	1	1				
2	36P–2470H–00	.SEAT COVER COMP. ,2	1	1				
3	4NK–24728–00	.BRACKET, SEAT	1	1				
4	95702–06500	.NUT, FLANGE	1	1				
5	4D9–27114–00	.STOPPER, MAIN STAND	4	4				
6	90338–07043	.PLUG	2	2				
7	36P–24724–00	.DAMPER, SEAT	1	1				
8	36P–24728–00	BRACKET, SEAT	1	1				
9	92012–06012	BOLT, BUTTON HEAD	2	2				
10	50W–24780–01	SEAT LOCK ASSY	1	1				
11	20S–24792–00	PLATE	1	1				
12	36P–2478X–00	BRACKET, SEAT LOCK	1	1				
13	95702–06500	NUT, FLANGE	2	2				
14	5JW–2478E–00	CABLE, SEAT LOCK	1	1				
15	2TV–W2470–00	ROTOR SET	1	1				
16	20S–2117K–00	STAY, LOCK	1	1				
17	90338–07043	PLUG	1	1				
18	90149–06081	SCREW	2	2				
19	36P–24710–00	SINGLE SEAT ASSY	1	1				
20	36P–2470F–00	.SEAT COVER COMP.	1	1				
21	36P–24718–00	.BRACKET, SEAT	1	1				
22	4D9–27114–00	.STOPPER, MAIN STAND	4	4				
23	2GH–24741–00	.PAD, SEAT	2	2				
24	90387–06091	.COLLAR	1	1				
25	90480–15M06	.GROMMET	1	1				
26	90105–06122	.BOLT, FLANGE	1	1				
27	90480–14016	.GROMMET	2	2				

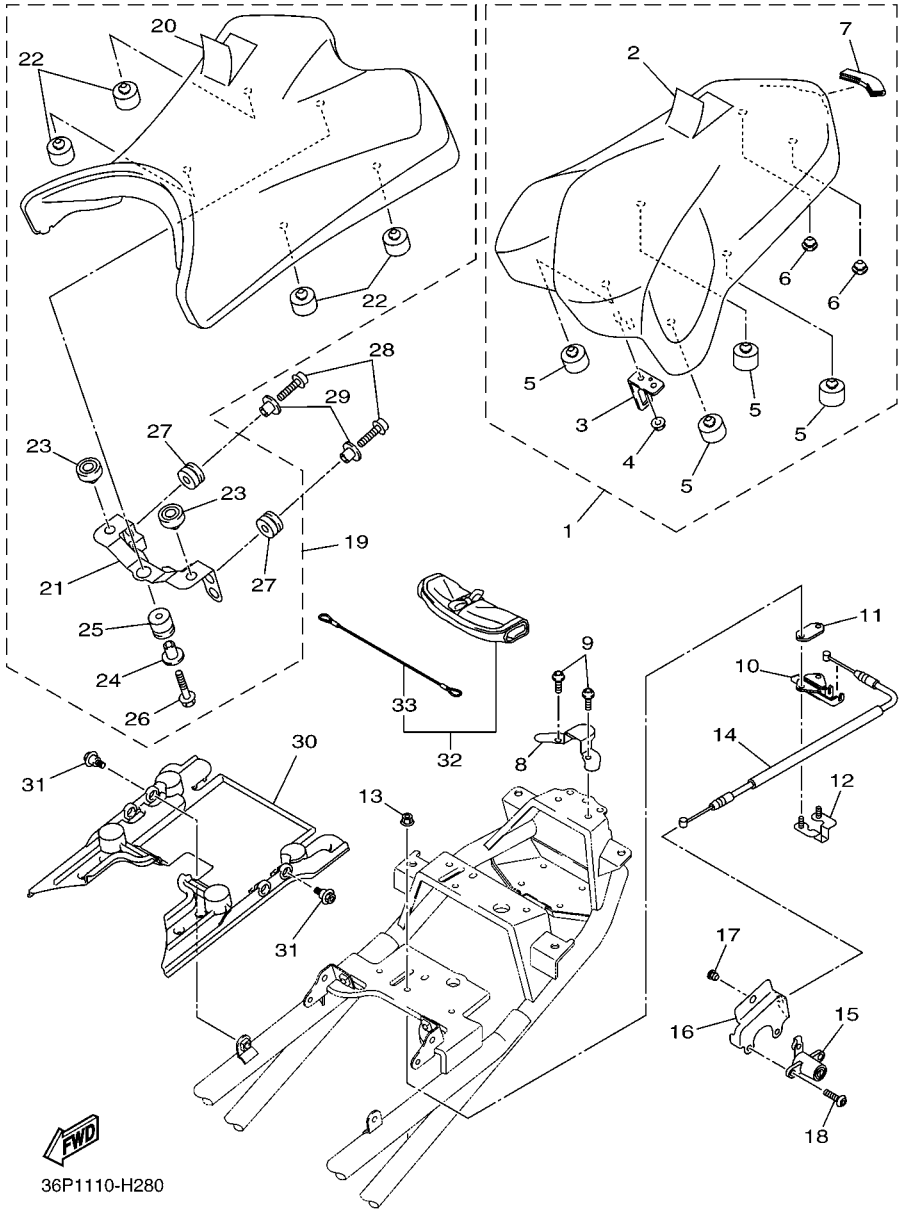

FIG. 28 SEAT

REF. NO.	PART NO.	DESCRIPTION	36P4	36P5				REMARKS
28	90110–06172	BOLT, HEXAGON SOCKET HEAD	2	2				
29	90387–077M3	COLLAR	2	2				
30	36P–2475B–00	SEAT BASE, UNDER	1	1				
31	90109–06236	BOLT	2	2				
32	20S–28100–00	TOOL KIT	1	1				
33	20S–21308–00	.HELMET HANGER ASSY	1	1				

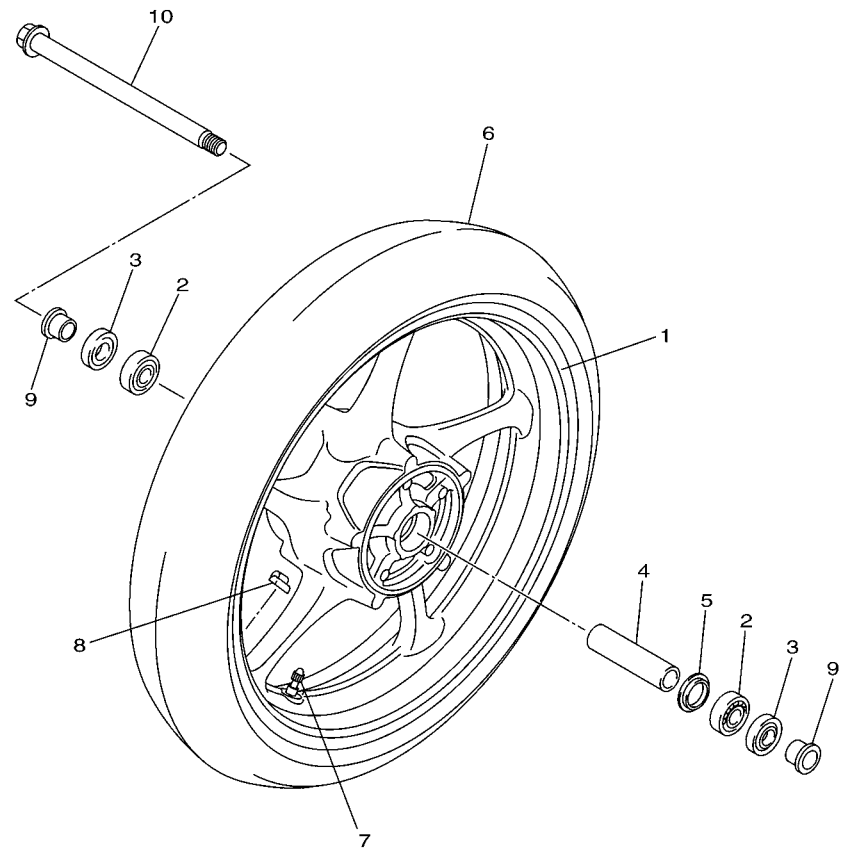

20S1300-H300

FIG. 29 FRONT WHEEL

REF. NO.	PART NO.	DESCRIPTION	36P4	36P5				REMARKS
1	20S–25168–00–98	CAST WHEEL, FRONT	1	1				LGB
2	93306–20331	BEARING	2	2				
3	93102–25017	OIL SEAL	2	2				
4	20S–25117–00	SPACER, BEARING	1	1				
5	146–25315–00	FLANGE, SPACER	1	1				
6	94112–17102	TIRE(120/70ZR17M/C 58W BT021F)	1	1				UR BRIDGESTONE
	94112–17103	TIRE(120/70ZR17M/C 58W)	1	1				UR DUNLOP
7	93900–00030	VALVE, RIM (TR412)	1	1				TAIHEIYO
8	5MT–25398–00	BALANCER, WHEEL (10G)	1	1				UR
	5MT–25398–10	BALANCER, WHEEL (20G)	1	1				UR
	5MT–25398–20	BALANCER, WHEEL (30G)	1	1				UR
9	20S–25183–00	COLLAR, WHEEL	2	2				
10	20S–25181–00	AXLE, WHEEL	1	1				

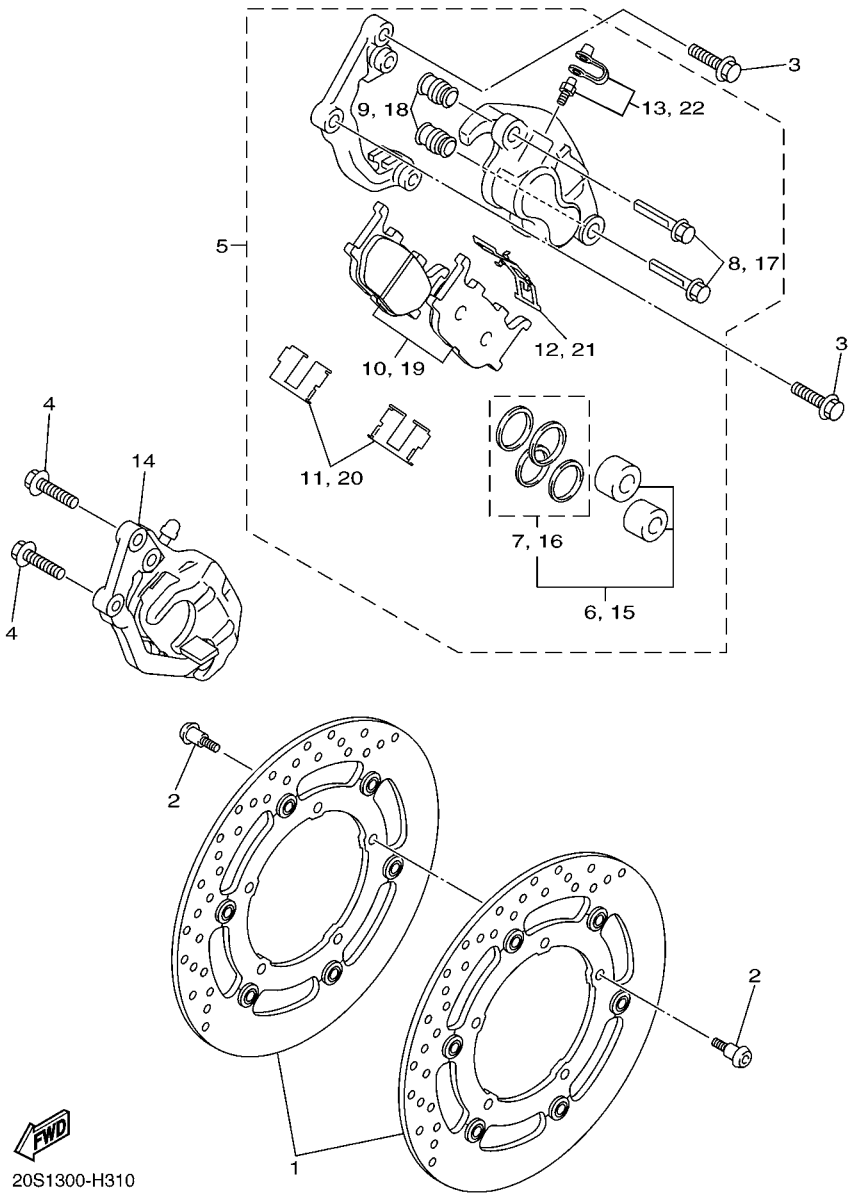

FIG. 30 FRONT BRAKE CALIPER

REF. NO.	PART NO.	DESCRIPTION	36P4	36P5				REMARKS
1	20S–2581T–00	DISK BRAKE ASSY	2	2				
2	90109–064G6	BOLT	10	10				
3	90105–10638	BOLT, FLANGE	2	2				
4	90105–10638	BOLT, FLANGE	2	2				
5	5VX–2580T–00	CALIPER ASSY (LEFT)	1	1				
6	5KS–W0057–00	.PISTON ASSY, CALIPER	1	1				
7	4FU–W0047–00	..CALIPER SEAL KIT	1	1				
8	5JW–25914–10	.PIN, SLIDE	2	2				
9	4TT–25937–00	.BOOT 2	2	2				
10	5VX–W0045–00	.BRAKE PAD KIT	1	1				
11	4BP–25919–00	.SUPPORT, PAD	2	2				
12	3YX–25929–00	.SPRING, ANTI RATTLE	1	1				
13	51L–W0048–00	.BLEED SCREW KIT	1	1				
14	5VX–2580U–00	CALIPER ASSY (RIGHT)	1	1				
15	5KS–W0057–00	.PISTON ASSY, CALIPER	1	1				
16	4FU–W0047–00	..CALIPER SEAL KIT	1	1				
17	5JW–25914–10	.PIN, SLIDE	2	2				
18	4TT–25937–00	.BOOT 2	2	2				
19	5VX–W0045–00	.BRAKE PAD KIT	1	1				
20	4BP–25919–00	.SUPPORT, PAD	2	2				
21	3YX–25929–00	.SPRING, ANTI RATTLE	1	1				
22	51L–W0048–00	.BLEED SCREW KIT	1	1				

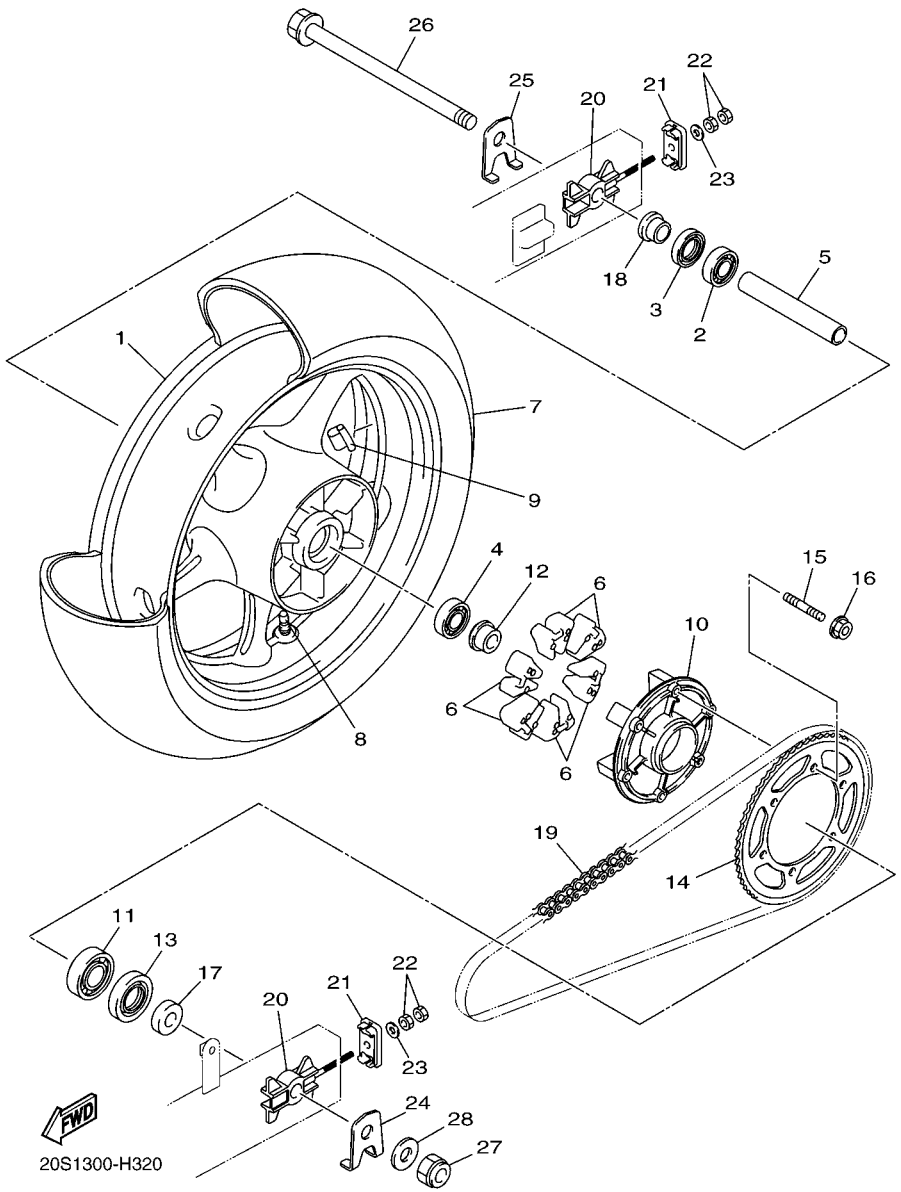

FIG. 31 REAR WHEEL

REF. NO.	PART NO.	DESCRIPTION	36P4	36P5				REMARKS
1	20S–25338–00–98	CAST WHEEL, REAR	1	1				LGB
2	93306–30317	BEARING	1	1				
3	93102–25044	OIL SEAL	1	1				
4	93306–30317	BEARING	1	1				
5	20S–25317–00	SPACER, BEARING	1	1				
6	20S–25364–00	DAMPER	6	6				
7	94116–17015	TIRE(160/60ZR17M/C 69W BT021R)	1	1				UR BRIDGESTONE
	94116–17019	TIRE (160/60ZR17M/C 69W)	1	1				UR DUNLOP
8	93900–00030	VALVE, RIM (TR412)	1	1				TAIHEIYO
9	5MT–25398–00	BALANCER, WHEEL (10G)	1	1				UR
	5MT–25398–10	BALANCER, WHEEL (20G)	1	1				UR
	5MT–25398–20	BALANCER, WHEEL (30G)	1	1				UR
10	20S–25366–00	CLUTCH, HUB	1	1				
11	93306–20659	BEARING	1	1				
12	20S–25383–00	COLLAR, WHEEL	1	1				
13	93106–40041	OIL SEAL	1	1				
14	20S–25446–00	SPROCKET, DRIVEN (46T)	1	1				
15	90116–10048	BOLT, STUD	6	6				
16	95602–10200	NUT, U FLANGE	6	6				
17	20S–25377–00	COLLAR, WHEEL	1	1				
18	20S–25183–00	COLLAR, WHEEL	1	1				
19	94582–24118	CHAIN (DID520VP2)	1	1				
20	1UF–25388–01	PULLER, CHAIN 1	2	2				
21	1UF–22174–01	END 1	2	2				
22	95302–08600	NUT	4	4				
23	92902–08600	WASHER, PLATE	2	2				
24	1UF–2533A–01	PLATE, INDICATOR	1	1				

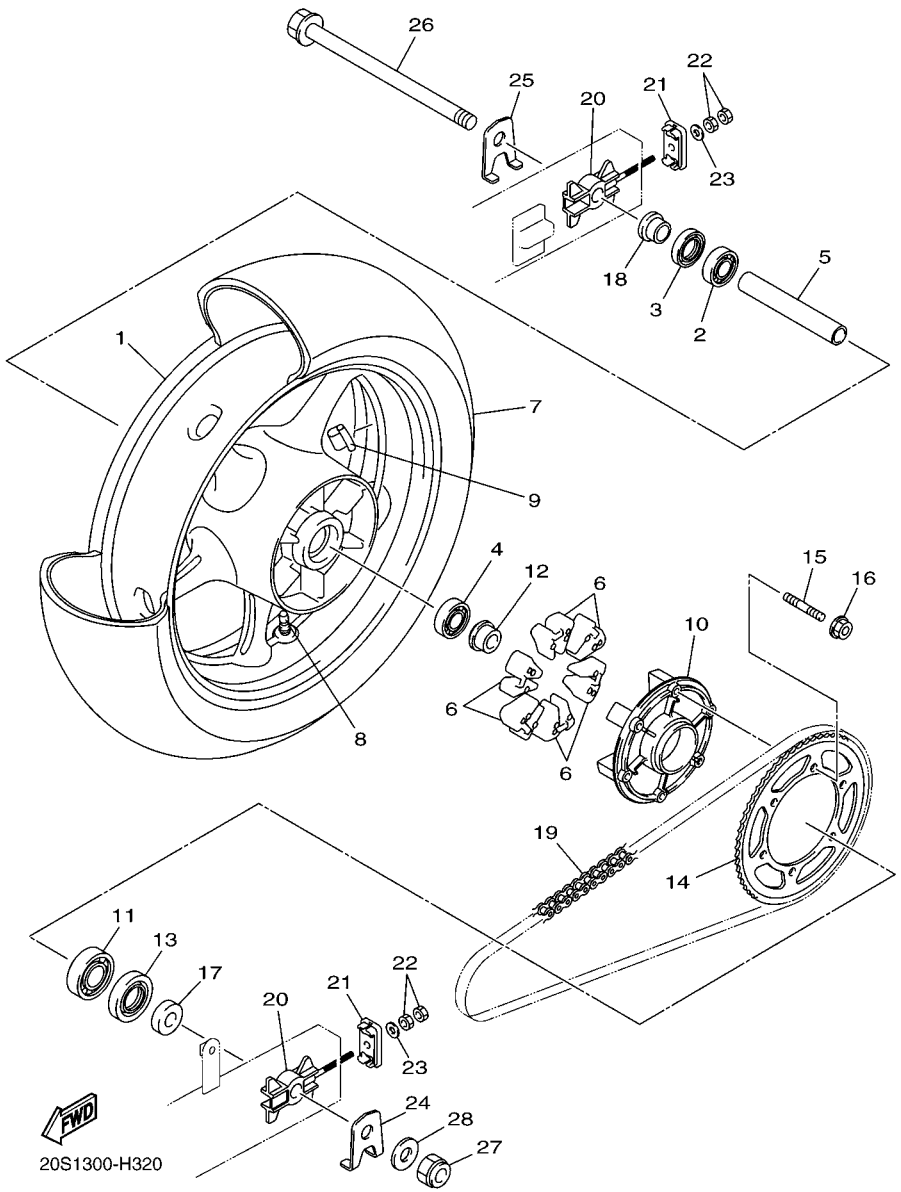

FIG. 31 REAR WHEEL

REF. NO.	PART NO.	DESCRIPTION	36P4	36P5				REMARKS
25	1UF–2533E–01	PLATE, INDICATOR 2	1	1				
26	20S–25381–00	AXLE, WHEEL	1	1				
27	90185–16002	NUT, SELF-LOCKING	1	1				
28	90201–16026	WASHER, PLATE	1	1				

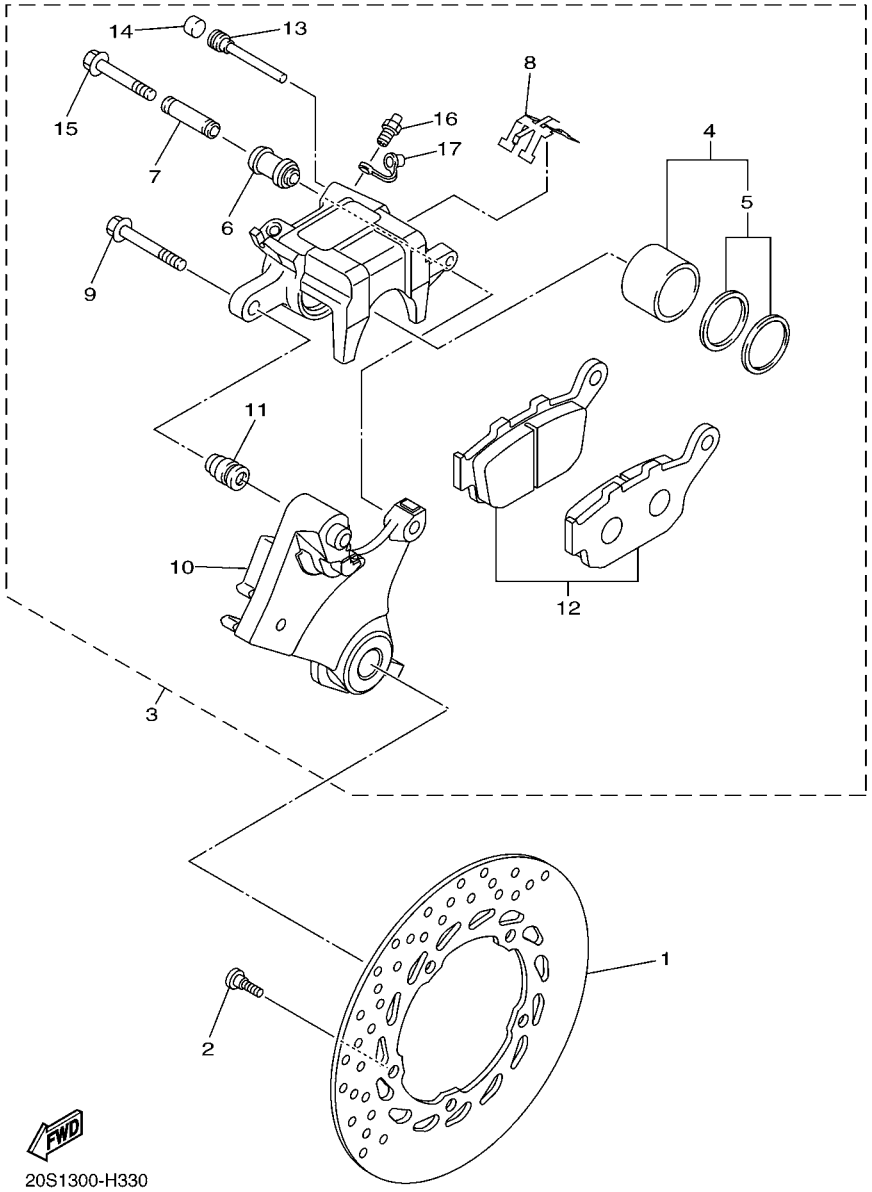

FIG. 32 REAR BRAKE CALIPER

REF. NO.	PART NO.	DESCRIPTION	36P4	36P5				REMARKS
1	20S–2582W–00	DISK, REAR BRAKE 2	1	1				
2	90109–083G4	BOLT	5	5				
3	20S–2580W–00	CALIPER ASSY, REAR 2	1	1				
4	5SL–W0057–00	.PISTON ASSY, CALIPER	1	1				
5	5SL–W0047–00	..CALIPER SEAL KIT	1	1				
6	5SL–25917–00	.BOOT, CALIPER	1	1				
7	5SL–25838–00	.SLEEVE, CALIPER	1	1				
8	5SL–25919–00	.SUPPORT, PAD	1	1				
9	5SL–25914–00	.PIN, SLIDE	1	1				
10	20S–25921–50	.BRACKET, SUPPORT	1	1				
11	3JD–25917–00	.BOOT, CALIPER	1	1				
12	20S–W0046–00	.BRAKE PAD KIT 2	1	1				
13	8CR–25924–00	.PIN, PAD	1	1				
14	5DH–25916–00	.PLUG	1	1				
15	5SL–25926–00	.BOLT	1	1				
16	1UY–25824–51	.SCREW, BLEED	1	1				
17	1UY–25825–51	.CAP	1	1				

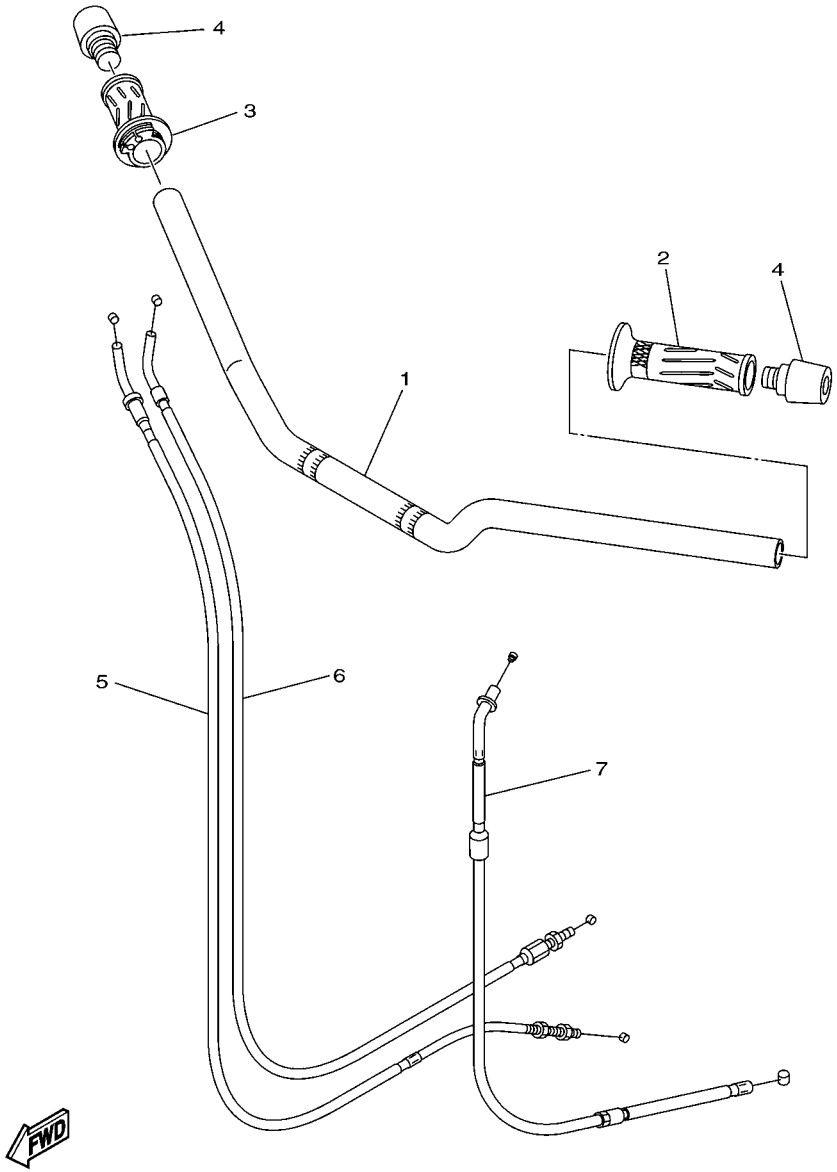

36P1110-H330

FIG. 33 STEERING HANDLE & CABLE

REF. NO.	PART NO.	DESCRIPTION	36P4	36P5				REMARKS
1	20S–26111–00	HANDLEBAR	1	1				
2	4YR–26241–02	GRIP (LEFT)	1	1				
3	4YR–26240–02	GRIP ASSY	1	1				
4	51J–26246–01	END, GRIP	2	2				
5	36P–26311–00	CABLE, THROTTLE 1	1	1				
6	36P–26312–00	CABLE, THROTTLE 2	1	1				
7	20S–26335–00	CABLE, CLUTCH	1	1				

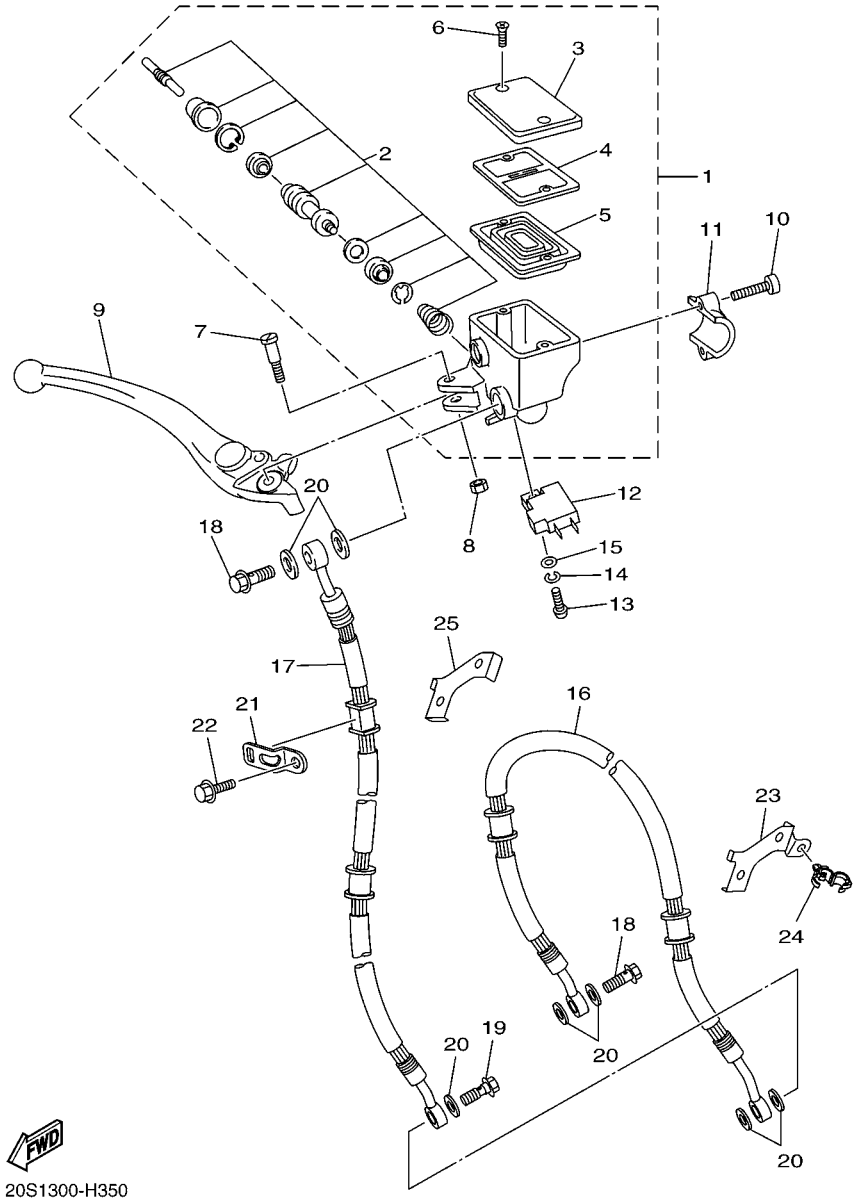

20S1300-H350

FIG. 34 FRONT MASTER CYLINDER

REF. NO.	PART NO.	DESCRIPTION	36P4	36P5				REMARKS
1	36C–W2587–00	MASTER CYLINDER SUB ASSY	1	1				
2	2D1–W0041–00	.CYLINDER KIT, MASTER	1	1				
3	5VS–25852–00	.CAP, RESERVOIR	1	1				
4	5VS–25855–00	.BUSH,DIAPHRAGM	1	1				
5	20S–25854–00	.GASKET, DIAPHRAGM	1	1				
6	5VS–2589H–00	.SCREW	2	2				
7	5VS–2589F–00	BOLT, LEVER	1	1				
8	95617–06100	NUT, U	1	1				
9	5VS–83922–00	LEVER 2	1	1				
10	5VS–26332–00	BOLT	2	2				
11	5VS–25867–00	BRACKET, MASTER CYLINDER	1	1				
12	4HM–83980–00	FRONT STOP SWITCH ASSY	1	1				
13	98502–04012	SCREW, PAN HEAD	1	1				
14	92902–04100	WASHER, SPRING	1	1				
15	92902–04600	WASHER, PLATE	1	1				
16	20S–25872–00	HOSE, BRAKE 1	1	1				
17	20S–25873–00	HOSE, BRAKE 2	1	1				
18	90401–10020	BOLT, UNION	2	2				
19	90401–10038	BOLT, UNION	1	1				
20	90430–10005	GASKET	7	7				
21	5SL–25876–00	HOLDER, BRAKE HOSE 2	1	1				
22	95802–06012	BOLT, FLANGE	1	1				
23	20S–2537W–00	BRACKET 1	1	1				
24	90464–18002	CLAMP	3	3				
25	20S–25876–00	HOLDER, BRAKE HOSE 2	1	1				

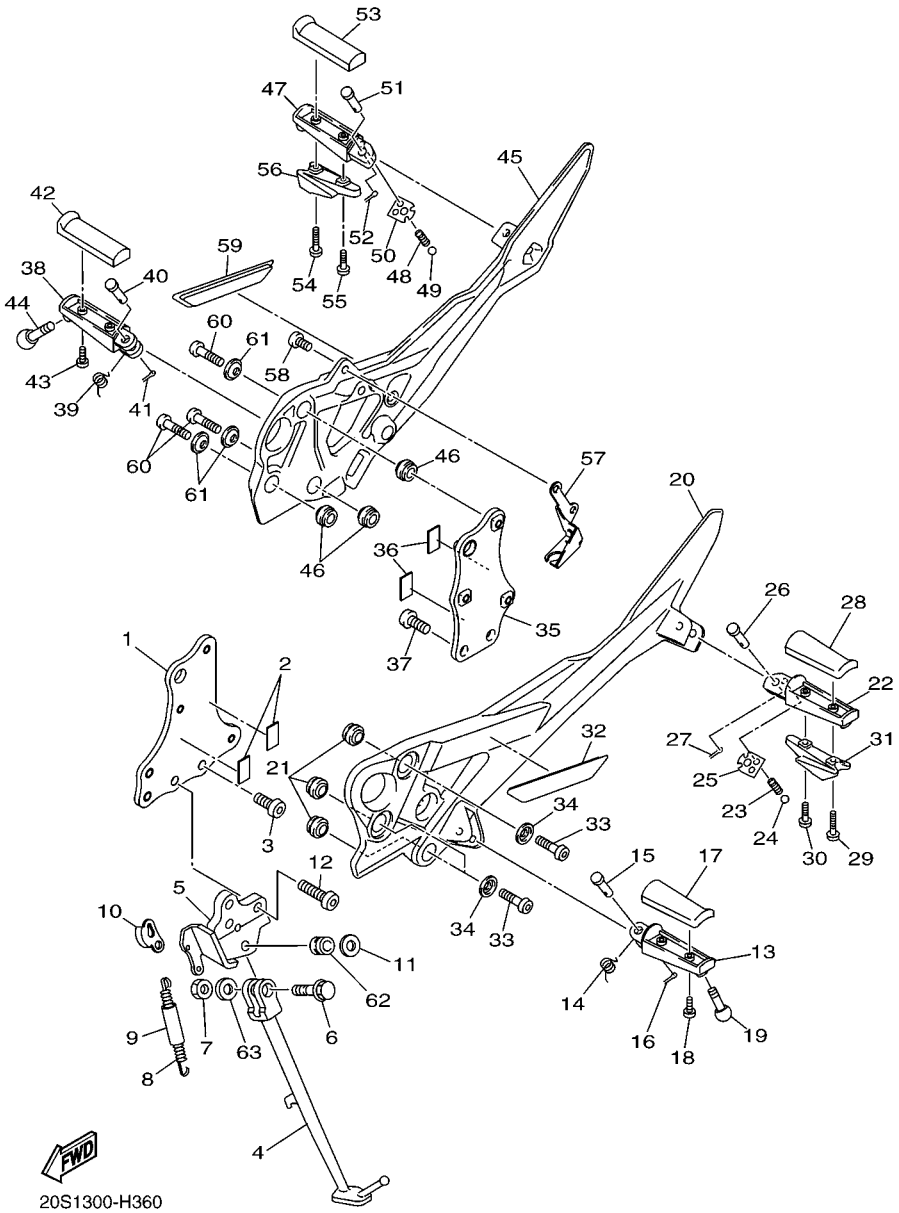

FIG. 35 STAND & FOOTREST

REF. NO.	PART NO.	DESCRIPTION	36P4	36P5				REMARKS
1	20S–274A3–00	BEACKET,ADAPTER 1	1	1				
2	4RR–21485–00	DAMPER, RUBBER 1	2	2				
3	90111–10043	BOLT,HEX. SOCKET BUTTON	1	1				
4	20S–27311–00	STAND, SIDE	1	1				
5	20S–27321–00	BRACKET, SIDE STAND	1	1				
6	90105–10365	BOLT, FLANGE	1	1				
7	90185–10023	NUT, SELF-LOCKING	1	1				
8	90506–23018	SPRING, TENSION	1	1				
9	5VX–27351–00	GUIDE, SIDE STAND	1	1				
10	5VX–27315–00	LINK, SIDE STAND	1	1				
11	90201–10051	WASHER, PLATE	1	1				
12	90111–10045	BOLT,HEX. SOCKET BUTTON	3	3				
13	4BH–27451–01	FOOTREST	1	1				
14	90508–20572	SPRING, TORSION	1	1				
15	91701–08042	PIN	1	1				
16	91402–25015	PIN, COTTER	1	1				
17	4BP–27413–00	COVER, FOOTREST	1	1				
18	90157–05025	SCREW, PAN HEAD	2	2				
19	90109–08203	BOLT	1	1				
20	20S–27442–00	BRACKET 2	1	1				
21	5VX–27424–00	DAMPER, FOOTREST 2	3	3				
22	5RT–27431–00	FOOTREST, REAR 1	1	1				
23	90501–12743	SPRING, COMPRESSION	1	1				
24	93501–04011	BALL	1	1				
25	5VX–27437–00	WASHER, SPECIAL	1	1				
26	91701–08042	PIN	1	1				
27	91402–25015	PIN, COTTER	1	1				

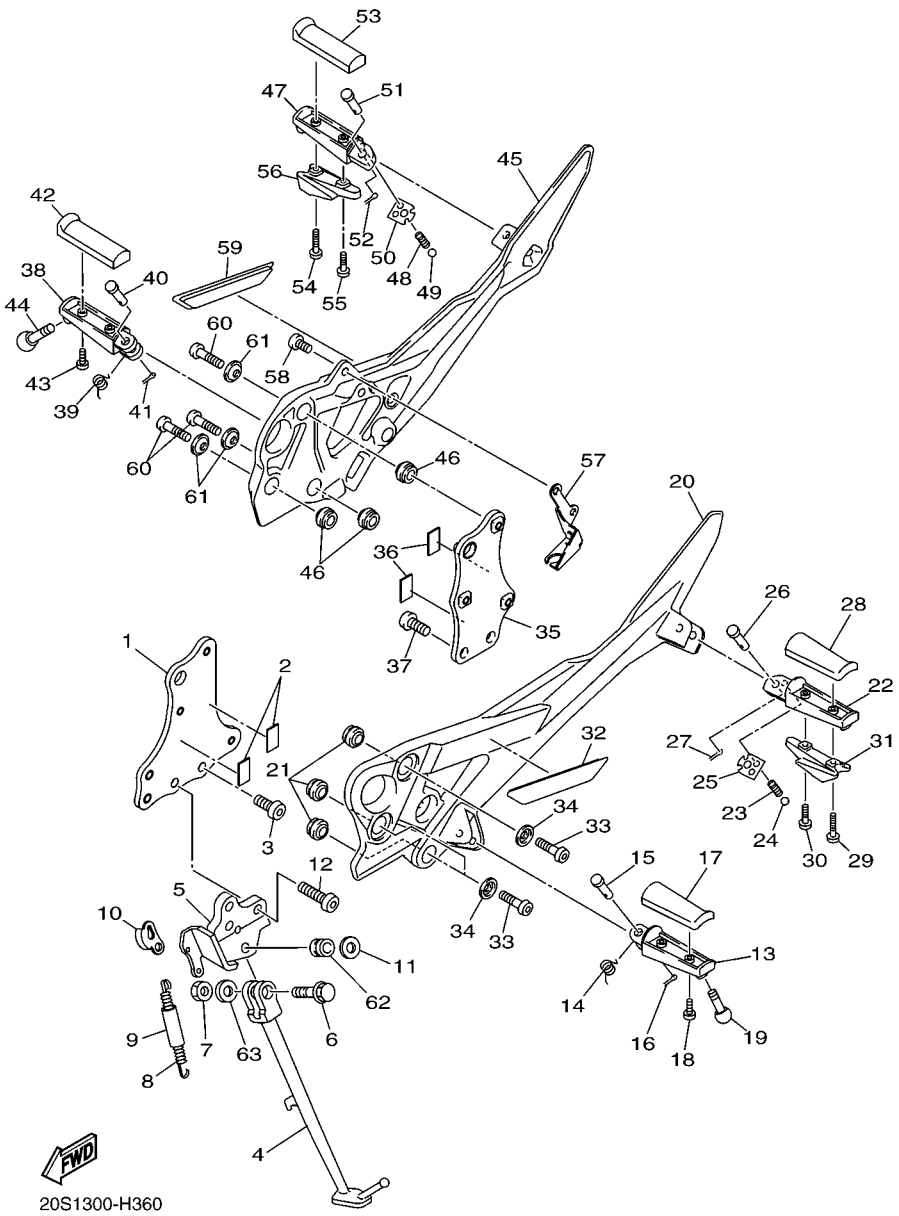

FIG. 35 STAND & FOOTREST

REF. NO.	PART NO.	DESCRIPTION	36P4	36P5				REMARKS
28	4BP–27413–00	COVER, FOOTREST	1	1				
29	90159–05187	SCREW, WITH WASHER	1	1				
30	90159–05004	SCREW, WITH WASHER	1	1				
31	5LV–2741E–01	ARM 2	1	1				
32	20S–27453–00	COVER 1	1	1				
33	90111–08066	BOLT,HEX. SOCKET BUTTON	3	3				
34	90209–08295	WASHER	3	3				
35	20S–274A4–00	BRACKET,ADAPTER 2	1	1				
36	4RR–21485–00	DAMPER, RUBBER 1	2	2				
37	90111–10036	BOLT,HEX. SOCKET BUTTON	2	2				
38	4BH–27461–01	FOOTREST	1	1				
39	90508–20572	SPRING, TORSION	1	1				
40	91701–08042	PIN	1	1				
41	91402–25015	PIN, COTTER	1	1				
42	4BP–27413–00	COVER, FOOTREST	1	1				
43	90157–05025	SCREW, PAN HEAD	2	2				
44	90109–08203	BOLT	1	1				
45	20S–27443–00	BRACKET 3	1	1				
46	5VX–27424–00	DAMPER, FOOTREST 2	3	3				
47	5RT–27441–00	FOOTREST, REAR 2	1	1				
48	90501–12743	SPRING, COMPRESSION	1	1				
49	93501–04011	BALL	1	1				
50	5VX–27437–00	WASHER, SPECIAL	1	1				
51	91701–08042	PIN	1	1				
52	91402–25015	PIN, COTTER	1	1				
53	4BP–27413–00	COVER, FOOTREST	1	1				
54	90159–05187	SCREW, WITH WASHER	1	1				

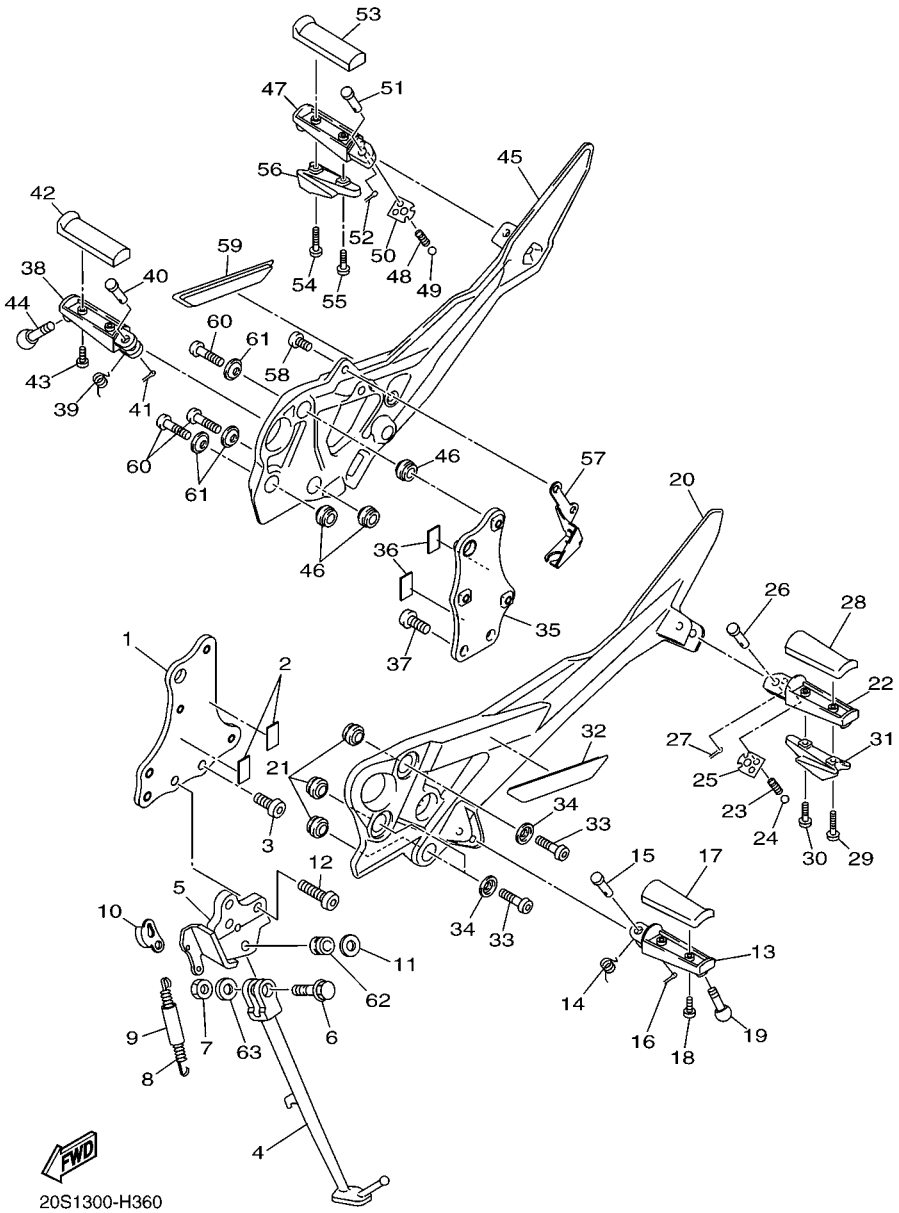

FIG. 35 STAND & FOOTREST

REF. NO.	PART NO.	DESCRIPTION	36P4	36P5				REMARKS
55	90159–05004	SCREW, WITH WASHER	1	1				
56	5LV–2741E–01	ARM 2	1	1				
57	20S–2144G–00	STAY, STOP SWITCH	1	1				
58	92014–08020	BOLT, BUTTON HEAD	2	2				
59	20S–27463–00	COVER 2	1	1				
60	90111–08066	BOLT,HEX. SOCKET BUTTON	3	3				
61	90209–08295	WASHER	3	3				
62	90387–1003G	COLLAR	1	1				
63	90201–10035	WASHER, PLATE	1	1				

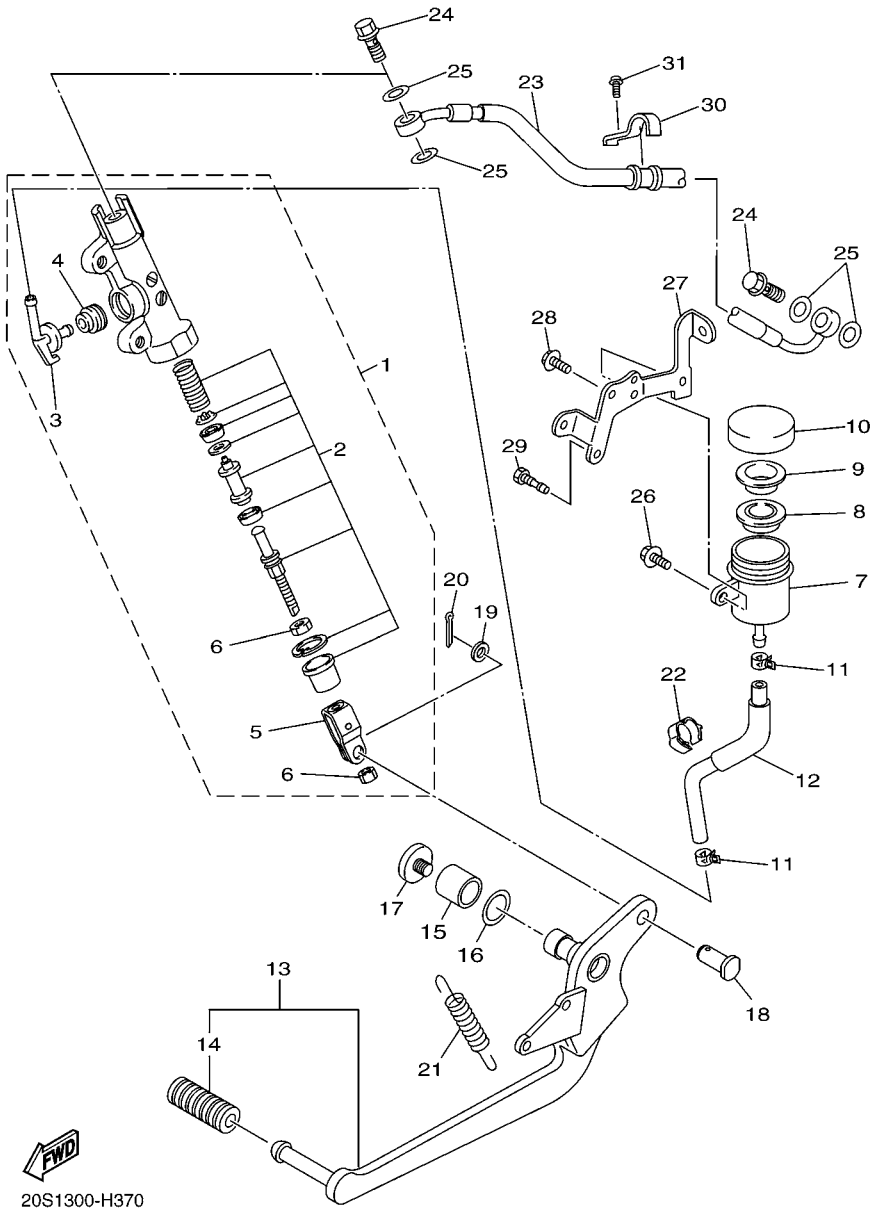

FIG. 36 REAR MASTER CYLINDER

REF. NO.	PART NO.	DESCRIPTION	36P4	36P5				REMARKS
1	2D1–2583V–00	RR. MASTER CYLINDER ASSY.	1	1				
2	5VX–W0042–50	.CYLINDER KIT, MASTER	1	1				
3	2D1–2582A–00	.JOINT	1	1				
4	4BP–2585F–01	.O-RING	1	1				
5	4BP–27222–02	.JOINT	1	1				
6	90170–08010	.NUT	2	2				
7	4P5–25894–00	TANK, RESERVOIR	1	1				
8	5SL–25854–00	DIAPHRAGM, RESERVOIR	1	1				
9	5SL–25855–00	BUSH,DIAPHRAGM	1	1				
10	5SL–25852–00	CAP, RESERVOIR	1	1				
11	90467–11044	CLIP	2	2				
12	20S–25895–00	HOSE, RESERVOIR	1	1				
13	20S–27200–00	PEDAL, BRAKE	1	1				
14	5EB–18113–00	.COVER, SHIFT PEDAL	1	1				
15	90386–14171	BUSH	1	1				
16	90206–14086	WASHER, WAVE	1	1				
17	90110–06249	BOLT, HEXAGON SOCKET HEAD	1	1				
18	90240–08005	PIN, CLEVIS	1	1				
19	90201–08066	WASHER, PLATE	1	1				
20	91402–20012	PIN, COTTER	1	1				
21	90506–23008	SPRING, TENSION	1	1				
22	90464–16003	CLAMP	1	1				
23	20S–2581K–00	HOSE, BRAKE 5	1	1				
24	90401–10020	BOLT, UNION	2	2				
25	90430–10005	GASKET	4	4				
26	90119–06137	BOLT, WITH WASHER	1	1				
27	20S–21228–00	BRACKET, RESERVE TANK	1	1				

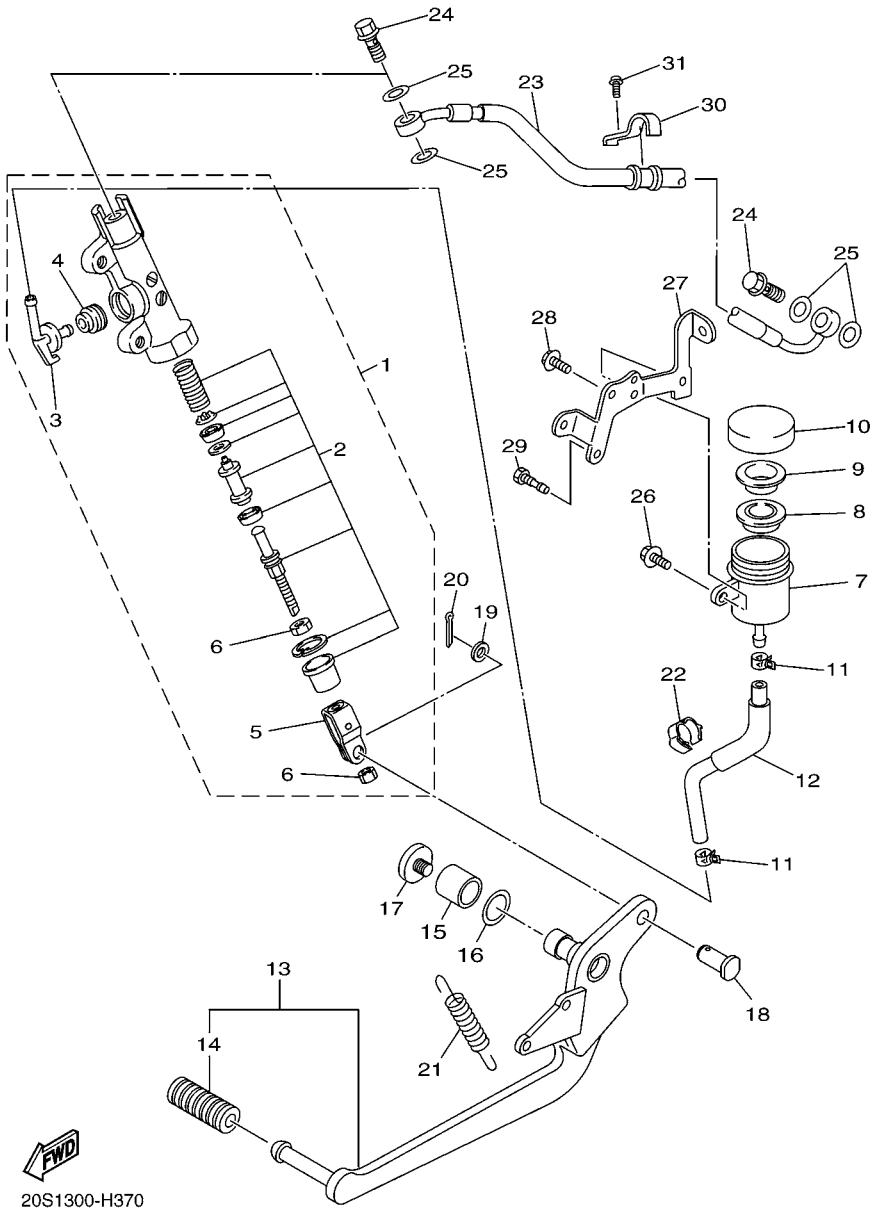

FIG. 36 REAR MASTER CYLINDER

REF. NO.	PART NO.	DESCRIPTION	36P4	36P5				REMARKS
28	95802–06012	BOLT, FLANGE	1	1				
29	90153–06034	SCREW, HEXAGON	1	1				
30	20S–2587A–00	HOLDER, BRAKE HOSE	1	1				
31	95022–06012	BOLT, FLANGE	1	1				

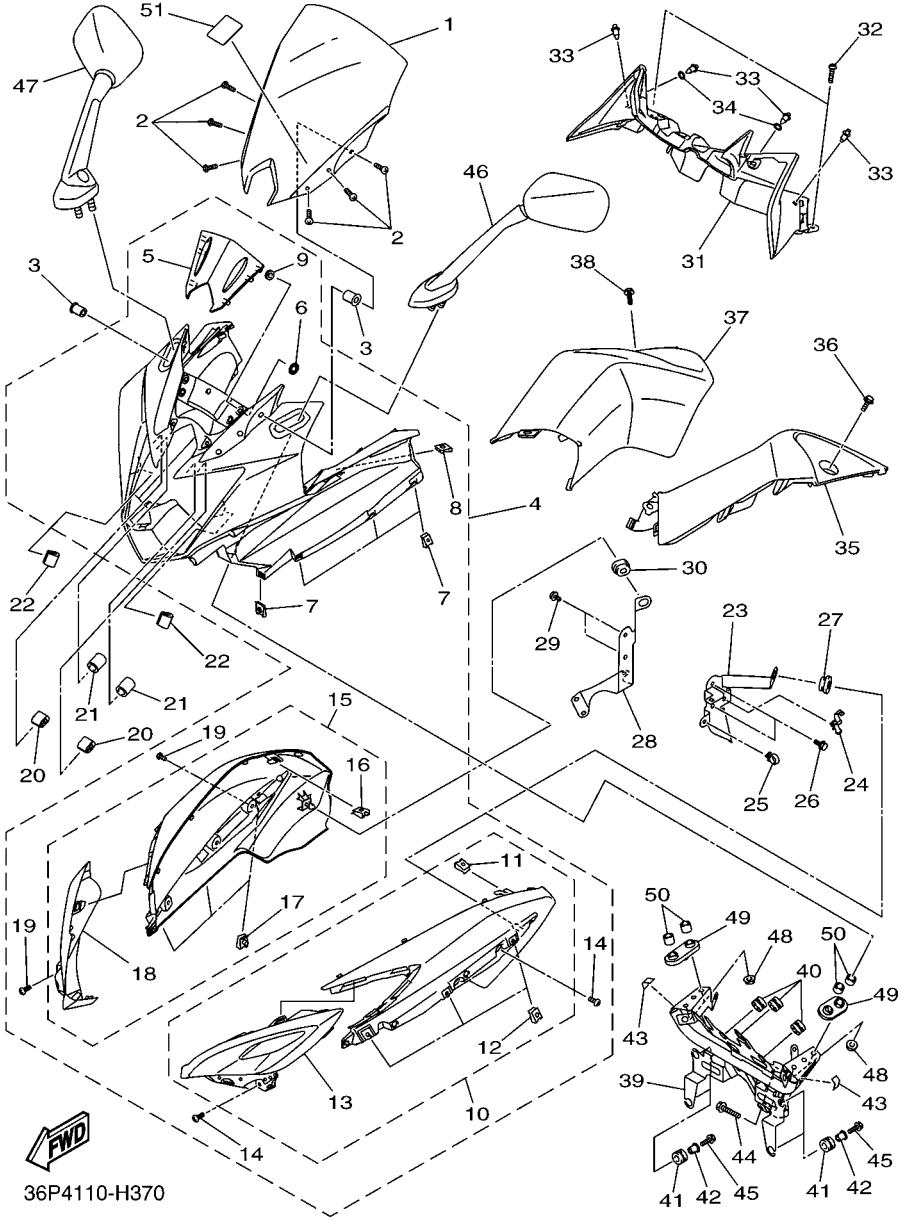

FIG. 37 COWLING 1

REF. NO.	PART NO.	DESCRIPTION	36P4	36P5				REMARKS
1	36P–28381–00	WINDSHIELD	1	1				
2	90150–05023	SCREW, ROUND HEAD	6	6				
3	90179–05523	NUT	6	6				
4	36P–Y283G–20–P2	BODY, FRONT UPPER 1	1	1				UR FOR RYC1
	36P–Y283G–20–P3	BODY, FRONT UPPER 1	1	1				UR FOR BWC1
5	36P–83559–00	.COVER, METER	1	1				
6	90183–05M02	.NUT, SPRING	4	4				
7	90183–05042	.NUT, SPRING	8	8				
8	90183–05076	.NUT, SPRING	2	2				
9	5SL–84753–00	.DAMPER	4	4				
10	36P–2830N–00	.BOX SUB ASSY	1	1				
11	90183–05076	..NUT, SPRING	1	1				
12	90183–05008	..NUT, SPRING	3	3				
13	36P–2837N–00	..GRILL, AIR INTAKE 1	1	1				
14	97702–50016	.SCREW, TAPPING	4	4				
15	36P–2830R–00	.BOX SUB ASSY	1	1				
16	90183–05076	..NUT, SPRING	1	1				
17	90183–05008	..NUT, SPRING	3	3				
18	36P–2837R–00	..GRILL, AIR INTAKE 2	1	1				
19	97702–50016	.SCREW, TAPPING	4	4				
20	20S–28376–00	TRIM	2	2				
21	90445–05003	HOSE	2	2				
22	1FK–2171M–00	MOLE, SIDE COVER 2	2	2				
23	36P–2172R–00	BRACKET 5	1	1				
24	90464–16006	CLAMP	1	1				
25	90464–15157	CLAMP	1	1				
26	95802–06012	BOLT, FLANGE	2	2				

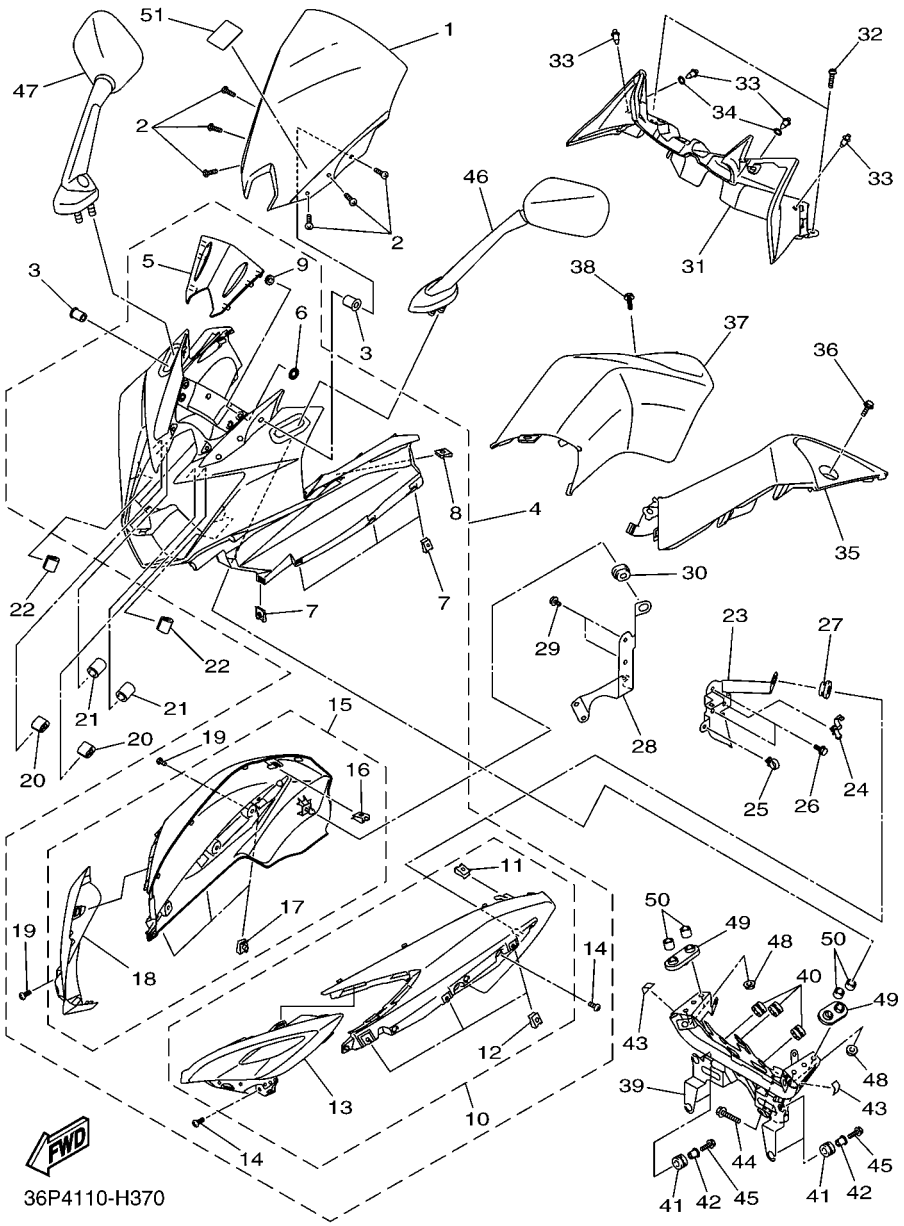

FIG. 37 COWLING 1

REF. NO.	PART NO.	DESCRIPTION	36P4	36P5				REMARKS
27	90480–01558	GROMMET	1	1				
28	36P–2172T–00	BRKT 6	1	1				
29	95802–06012	BOLT, FLANGE	2	2				
30	90480–01558	GROMMET	1	1				
31	36P–2836K–00	PANEL, INNER 1	1	1				
32	90111–05034	BOLT,HEX. SOCKET BUTTON	2	2				
33	90269–06008	RIVET	4	4				
34	90202–06004	WASHER, PLATE	2	2				
35	36P–2836L–00	PANEL, INNER 2	1	1				
36	90111–05034	BOLT,HEX. SOCKET BUTTON	1	1				
37	36P–2836M–00	PANEL, INNER 3	1	1				
38	90111–05034	BOLT,HEX. SOCKET BUTTON	1	1				
39	36P–28356–00	STAY 1	1	1				
40	3C3–83513–00	DAMPER	3	3				
41	90480–14004	GROMMET	4	4				
42	90387–07391	COLLAR	4	4				
43	36P–2837J–00	DAMPER 5	2	2				
44	95822–08035	BOLT, FLANGE	2	2				
45	95822–06025	BOLT, FLANGE	4	4				
46	36P–26280–00	REAR VIEW MIRROR ASSY (LEFT)	1	1				
47	36P–26290–00	REAR VIEW MIRROR ASSY (RIGHT)	1	1				
48	95702–06500	NUT, FLANGE	4	4				
49	3C3–26298–00	PLATE, MIRROR FITTING 1	2	2				
50	90387–064T3	COLLAR	4	4				
51	4B5–2815K–00	LABEL, NOTICE WINDSHIELD 1	1	1				

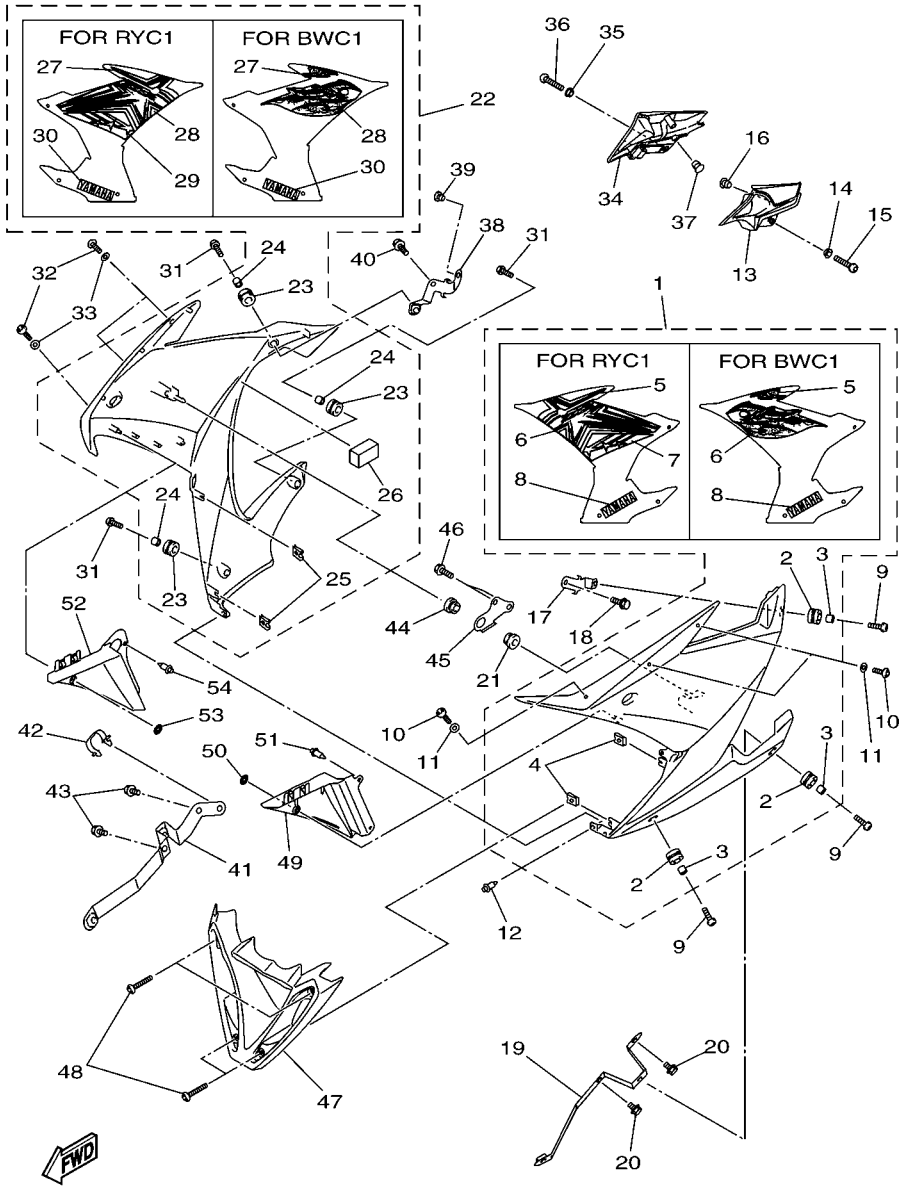

FIG. 38 COWLING 2

REF. NO.	PART NO.	DESCRIPTION	36P4	36P5				REMARKS
1	36P–Y283U–20–P2	PANEL ASSEMBLY 1	1	1				UR FOR RYC1
	36P–Y283U–30–P3	PANEL ASSEMBLY 1	1	1				UR FOR BWC1
2	90480–14003	.GROMMET	3	3				
3	90387–06057	.COLLAR	3	3				
4	90183–05076	.NUT, SPRING	2	2				
5	36P–2839G–00	.GRAPHIC, 10	1	1				UR FOR RYC1
	36P–2831Y–00	.GRAPHIC 14	1	1				UR FOR BWC1
6	36P–2832K–00	.GRAPHIC, 12	1	1				UR FOR RYC1
	36P–2832C–00	.GRAPHIC 16	1	1				UR FOR BWC1
7	36P–2832P–00	.GRAPHIC 18	1	1				FOR RYC1
8	36P–2153E–20	.EMBLEM, YAMAHA	1	1				
9	90149–06302	SCREW	3	3				
10	90111–05007	BOLT,HEX. SOCKET BUTTON	3	3				
11	90202–05180	WASHER, PLATE	3	3				
12	90269–06008	RIVET	1	1				
13	36P–2171N–00	MOLE, SIDE COVER 3	1	1				
14	90387–06130	COLLAR	1	1				
15	90149–06302	SCREW	1	1				
16	90338–07043	PLUG	1	1				
17	36P–2833A–00	BRACKET 7	1	1				
18	95802–06014	BOLT, FLANGE	1	1				
19	36P–2836A–00	BRACKET 1	1	1				
20	90109–060E9	BOLT	2	2				
21	90480–01558	GROMMET	1	1				
22	36P–Y283V–20–P2	PANEL ASSEMBLY 2	1	1				UR FOR RYC1
	36P–Y283V–30–P3	PANEL ASSEMBLY 2	1	1				UR FOR BWC1
23	90480–14003	.GROMMET	3	3				

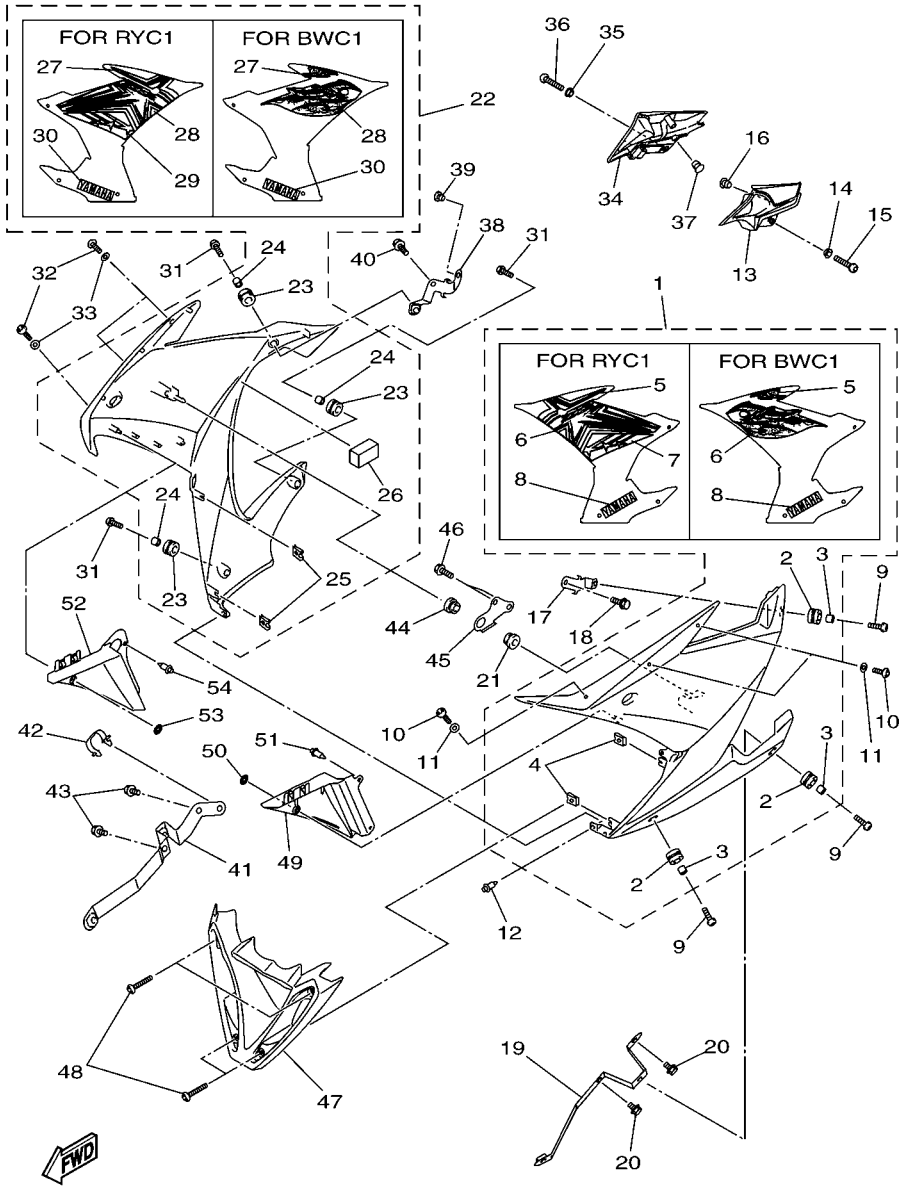

FIG. 38 COWLING 2

REF. NO.	PART NO.	DESCRIPTION	36P4	36P5				REMARKS
24	90387–06057	.COLLAR	3	3				
25	90183–05076	.NUT, SPRING	2	2				
26	2C0–2162G–00	.PLATE 1	1	1				
27	36P–2839J–00	.GRAPHIC, 11	1	1				UR FOR RYC1
	36P–2832B–00	.GRAPHIC15	1	1				UR FOR BWC1
28	36P–2832L–00	.GRAPHIC, 13	1	1				UR FOR RYC1
	36P–2832D–00	.GRAPHIC 17	1	1				UR FOR BWC1
29	36P–283B3–00	.GRAPHIC, 19	1	1				FOR RYC1
30	36P–2153E–20	.EMBLEM, YAMAHA	1	1				
31	90149–06302	SCREW	3	3				
32	90111–05007	BOLT,HEX. SOCKET BUTTON	3	3				
33	90202–05180	WASHER, PLATE	3	3				
34	36P–2171R–00	MOLE, SIDE COVER 4	1	1				
35	90387–06130	COLLAR	1	1				
36	90149–06302	SCREW	1	1				
37	90338–07043	PLUG	1	1				
38	36P–2833E–00	BRACKET 8	1	1				
39	90338–07157	PLUG	1	1				
40	95802–06014	BOLT, FLANGE	1	1				
41	36P–2836E–00	BRACKET 2	1	1				
42	90464–24230	CLAMP	1	1				
43	90109–060E9	BOLT	2	2				
44	90480–01558	GROMMET	1	1				
45	20S–21843–00	STAY, 4	1	1				
46	95822–06014	BOLT, FLANGE	2	2				
47	36P–22863–00	COVER, UNDER	1	1				
48	90111–05034	BOLT,HEX. SOCKET BUTTON	4	4				

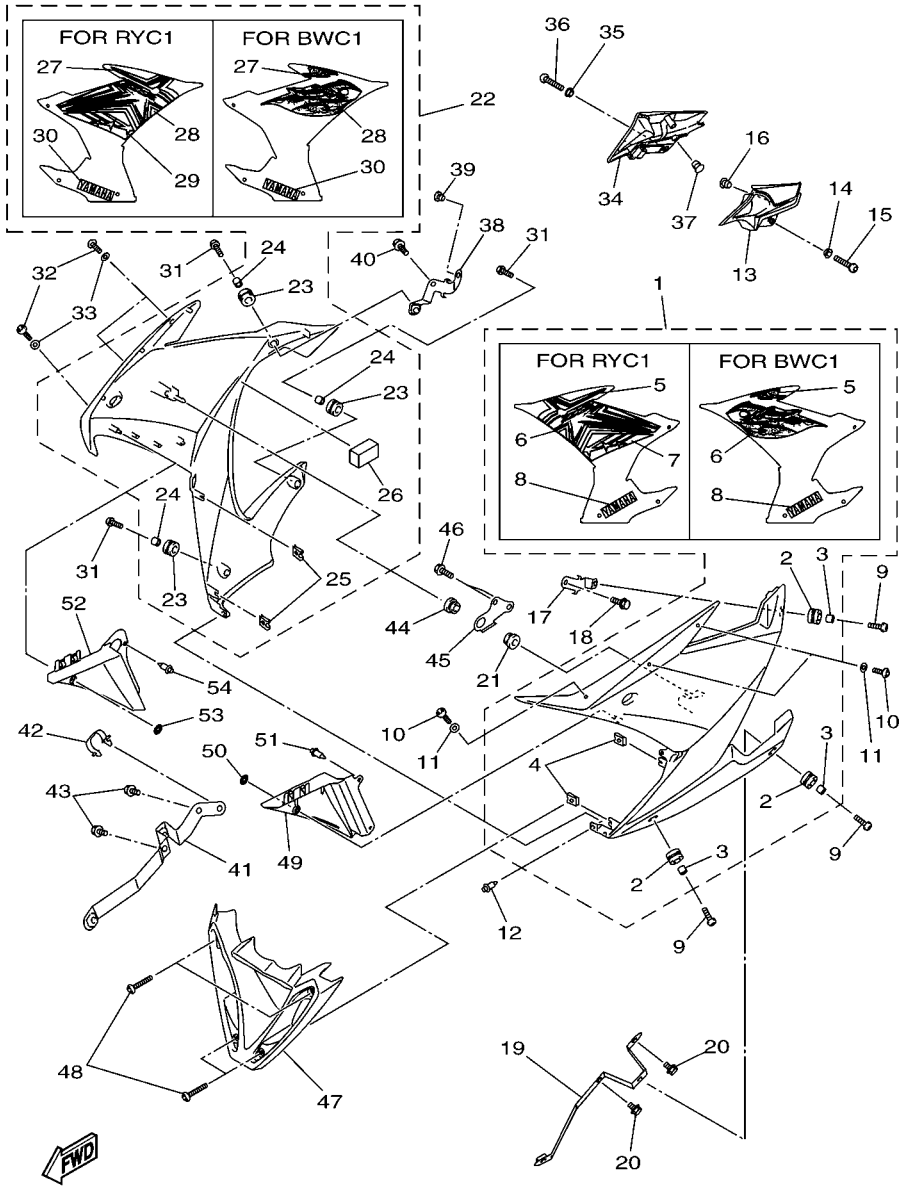

FIG. 38 COWLING 2

REF. NO.	PART NO.	DESCRIPTION	36P4	36P5				REMARKS
49	36P–2836N–00	PANEL, INNER 4	1	1				
50	90183–05M02	NUT, SPRING	2	2				
51	90269–06008	RIVET	1	1				
52	36P–2836R–00	PANEL, INNER 5	1	1				
53	90183–05M02	NUT, SPRING	2	2				
54	90269–06008	RIVET	1	1				

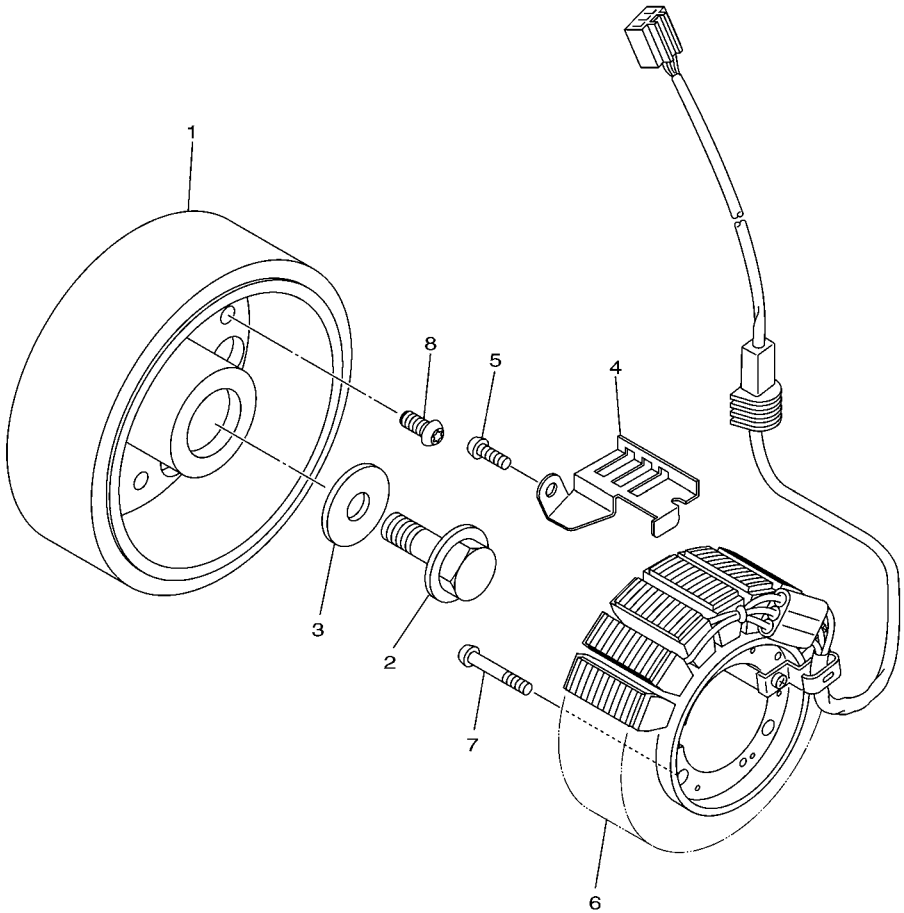

20S1300-H380

FIG. 39 GENERATOR

REF. NO.	PART NO.	DESCRIPTION	36P4	36P5				REMARKS
1	5VX–81450–00	ROTOR ASSY	1	1				
2	90105–126A8	BOLT, FLANGE	1	1				
3	90201–12008	WASHER, PLATE	1	1				
4	5VX–15484–00	CLAMP 2	1	1				
5	90149–06071	SCREW	1	1				
6	20S–81410–00	STATOR ASSY	1	1				
7	90149–06093	SCREW	3	3				
8	90149–08030	SCREW	3	3				

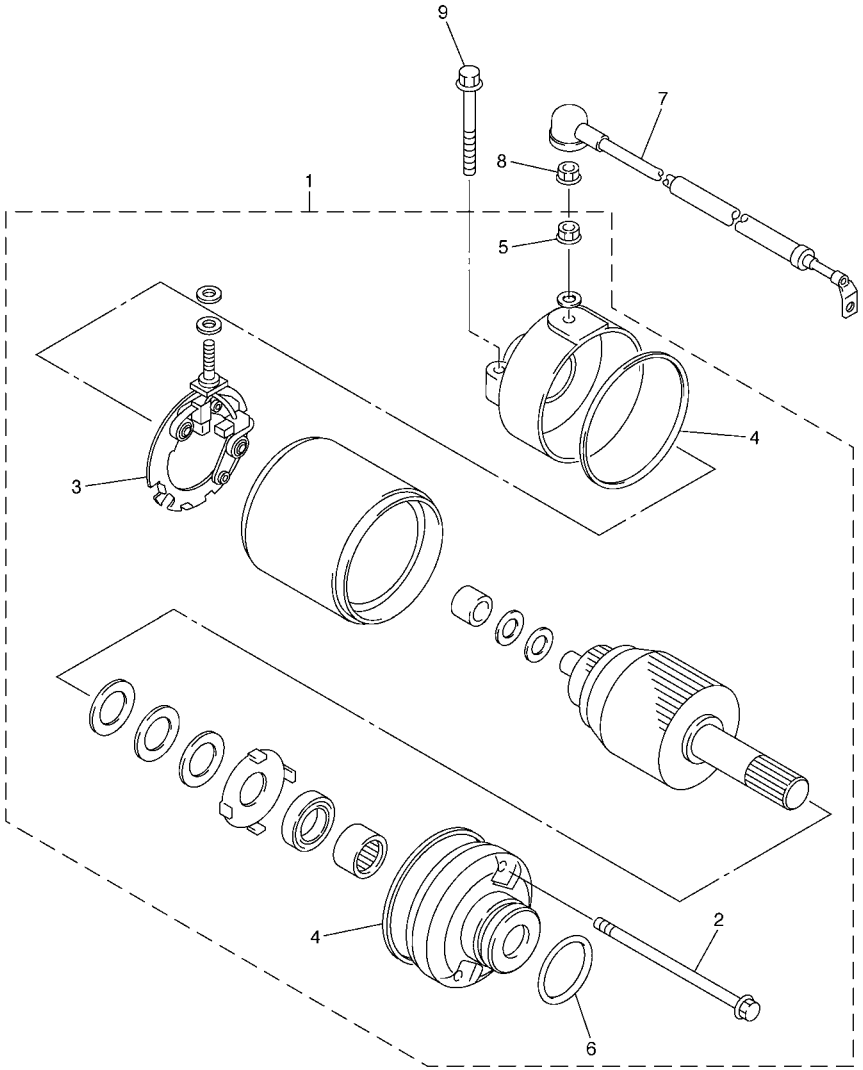

2C01300-E400

FIG. 40 STARTING MOTOR

REF. NO.	PART NO.	DESCRIPTION	36P4	36P5				REMARKS
1	2C0–81890–00	MOTOR ASSY	1	1				
2	4WP–81826–00	.BOLT	2	2				
3	4WP–81801–00	.BRUSH SET	1	1				
4	4WP–81844–00	.GASKET	2	2				
5	4XV–8182A–00	.NUT	1	1				
6	1FK–81847–00	.O-RING	1	1				
7	5VX–81815–00	CORD, STARTER MOTOR	1	1				
8	4XV–8182A–00	NUT	1	1				
9	95022–06025	BOLT, FLANGE	2	2				

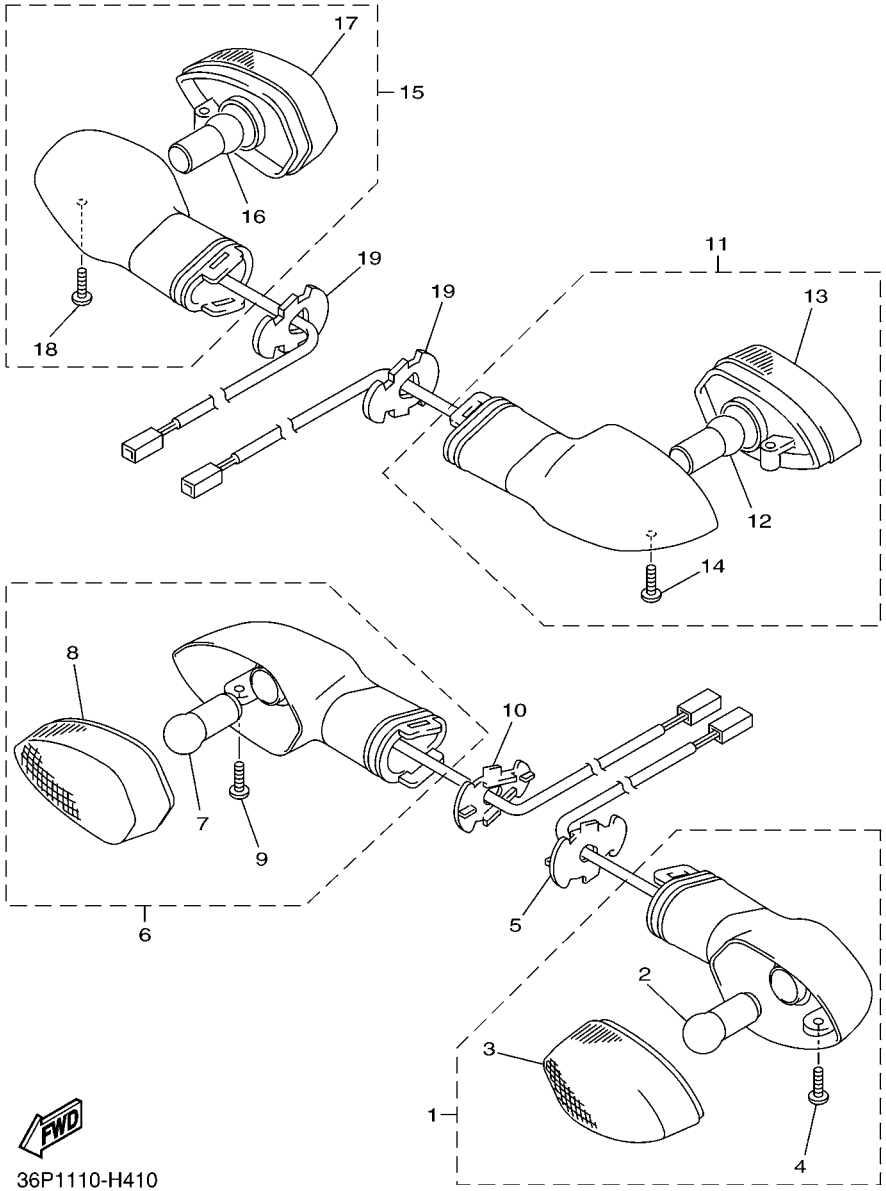

36P1110-H410

FIG. 41 FLASHER LIGHT

REF. NO.	PART NO.	DESCRIPTION	36P4	36P5				REMARKS
1	2C0–83310–10	FRONT FLASHER LIGHT ASSY 1	1	1				
2	1A2–84714–41	.BULB (12V-21/5W)	1	1				
3	2C0–8333A–10	.LENS COMP	1	1				
4	97702–40010	.SCREW, TAPPING	1	1				
5	2C0–83318–00	STAY, FLASHER 1	1	1				
6	2C0–83320–10	FRONT FLASHER LIGHT ASSY 2	1	1				
7	1A2–84714–41	.BULB (12V-21/5W)	1	1				
8	2C0–8334A–10	.LENS COMP	1	1				
9	97702–40010	.SCREW, TAPPING	1	1				
10	2C0–83318–00	STAY, FLASHER 1	1	1				
11	2C0–83330–10	REAR FLASHER LIGHT ASSY 1	1	1				
12	306–83311–40	.BULB, FLASHER (12V-21W)	1	1				
13	2C0–8334A–10	.LENS COMP	1	1				
14	97702–40010	.SCREW, TAPPING	1	1				
15	2C0–83340–10	REAR FLASHER LIGHT ASSY 2	1	1				
16	306–83311–40	.BULB, FLASHER (12V-21W)	1	1				
17	2C0–8333A–10	.LENS COMP	1	1				
18	97702–40010	.SCREW, TAPPING	1	1				
19	3D7–83318–10	STAY, FLASHER 1	2	2				

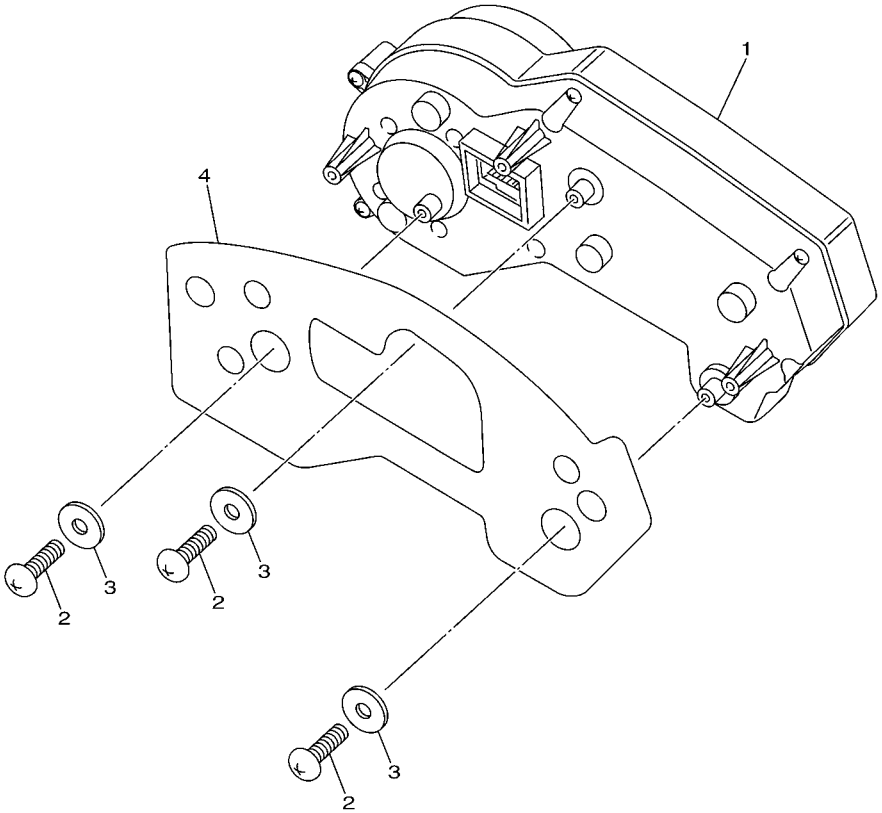

36P1110-H420

FIG. 42 METER

REF. NO.	PART NO.	DESCRIPTION	36P4	36P5				REMARKS
1	36P–83500–10	METER ASSY(MPH)	1	1				
2	90160–05012	SCREW, ROUND TAPPING	3	3				
3	90201–05036	WASHER, PLATE	3	3				
4	36P–83615–00	BLIND, METER	1	1				

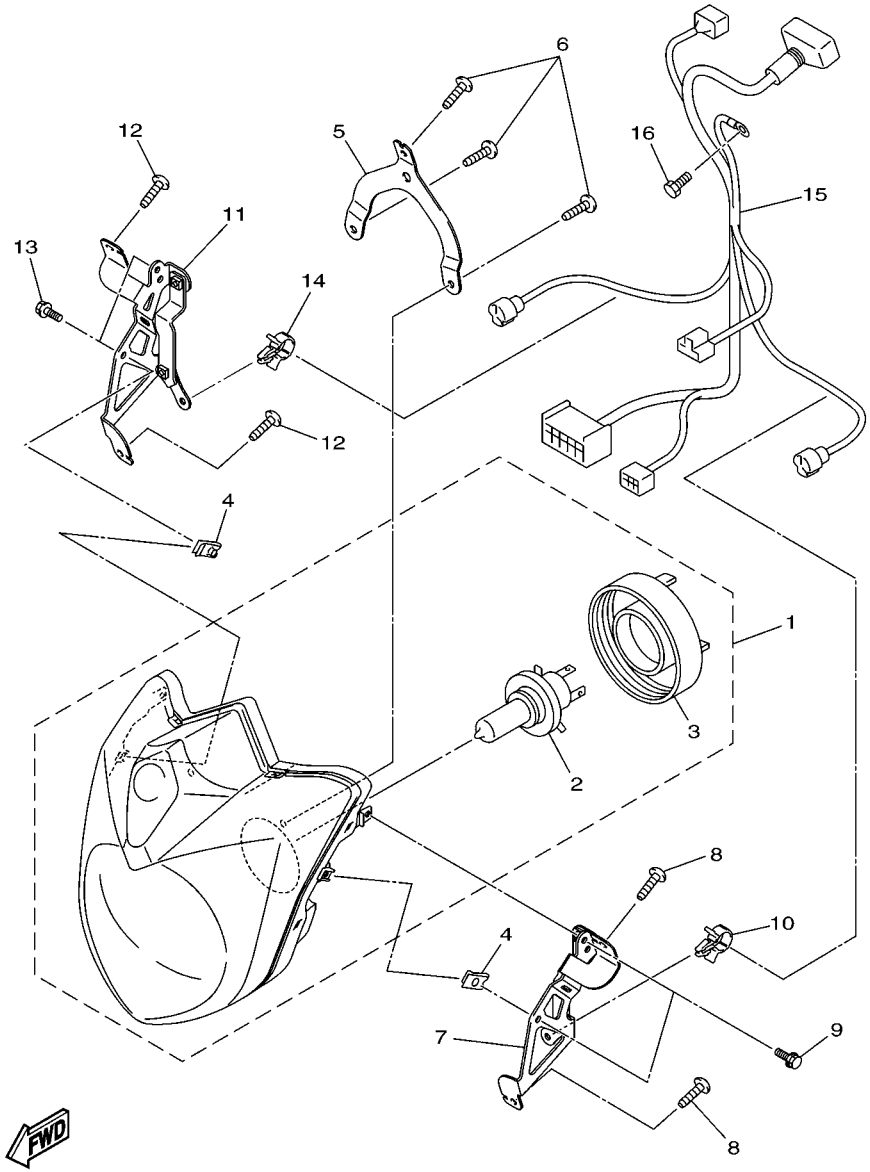

36P1110-H430

FIG. 43 HEADLIGHT

REF. NO.	PART NO.	DESCRIPTION	36P4	36P5				REMARKS
1	36P–84300–00	HEADLIGHT ASSY	1	1				
2	4K0–84314–G0	.BULB (12V 60/55W HALOGEN)	1	1				
3	5JW–84397–00	.COVER, SOCKET	1	1				
4	90183–06069	NUT, SPRING	2	2				
5	36P–28396–00	PLATE 1	1	1				
6	97702–50016	SCREW, TAPPING	3	3				
7	36P–84118–00	STAY, HEADLIGHT 1	1	1				
8	97702–50016	SCREW, TAPPING	2	2				
9	95802–06012	BOLT, FLANGE	2	2				
10	90464–15157	CLAMP	1	1				
11	36P–84119–00	STAY, HEADLIGHT 2	1	1				
12	97702–50016	SCREW, TAPPING	2	2				
13	95802–06012	BOLT, FLANGE	2	2				
14	90464–15157	CLAMP	1	1				
15	36P–84359–00	CORD, HEADLIGHT	1	1				
16	91380–05008	BOLT	1	1				

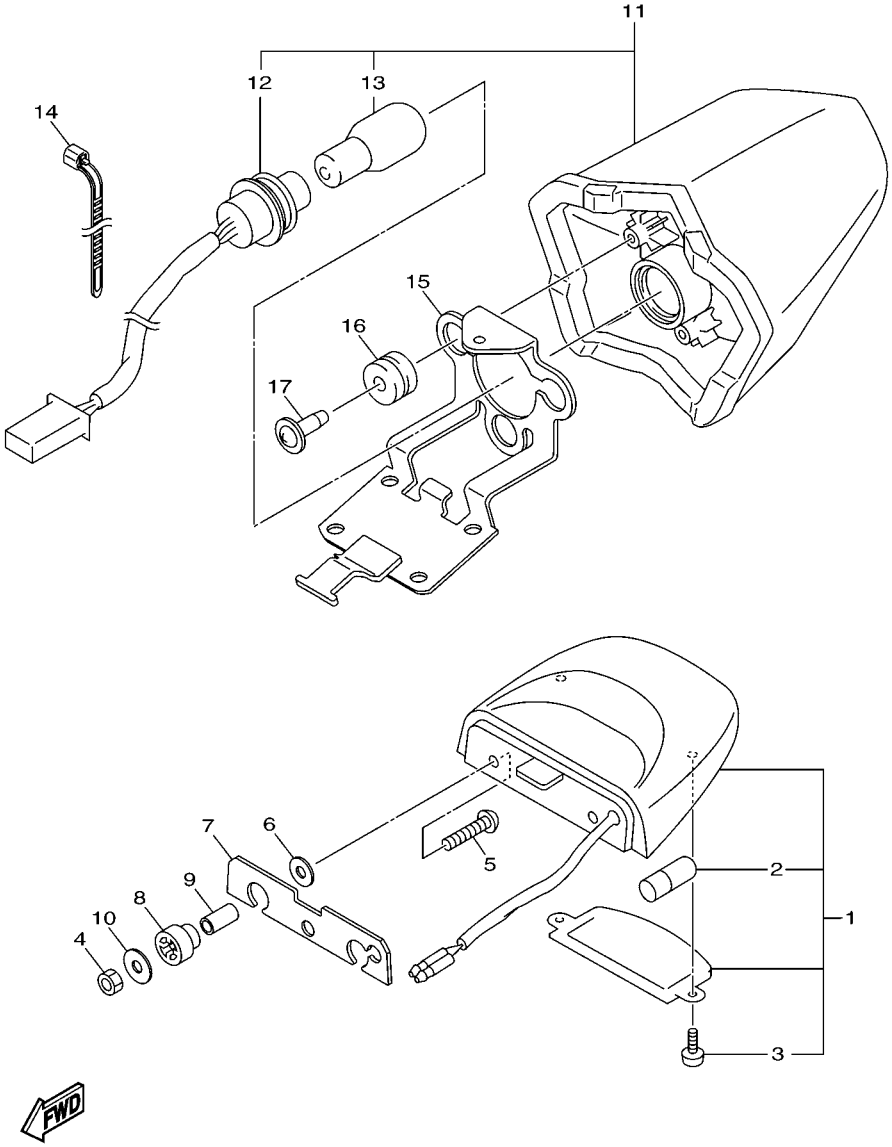

36P1110-H440

FIG. 44 TAILLIGHT

REF. NO.	PART NO.	DESCRIPTION	36P4	36P5				REMARKS
1	5VX–84745–01	LICENCE LIGHT UNIT ASSY	1	1				
2	4HC–84744–00	.BULB (12V-5W)	1	1				
3	97706–04012	.SCREW, TAPPING	2	2				
4	95602–05100	NUT, U	2	2				
5	90111–05030	BOLT,HEX. SOCKET BUTTON	2	2				
6	90201–05043	WASHER, PLATE	2	2				
7	20S–84753–00	DAMPER	1	1				
8	3F9–84553–00	DAMPER	2	2				
9	90387–05049	COLLAR	2	2				
10	90201–05025	WASHER, PLATE	2	2				
11	20S–84710–00	TAILLIGHT UNIT ASSY	1	1				
12	20S–84735–00	.CORD ASSY	1	1				
13	3P6–83331–10	.BULB,FLASHER (12V-21/5W)	1	1				
14	90464–25004	CLAMP	1	1				
15	36P–84519–00	BRACKET, TAILLIGHT	1	1				
16	90480–18276	GROMMET	3	3				
17	90164–05001	SCREW, TAPPING	3	3				

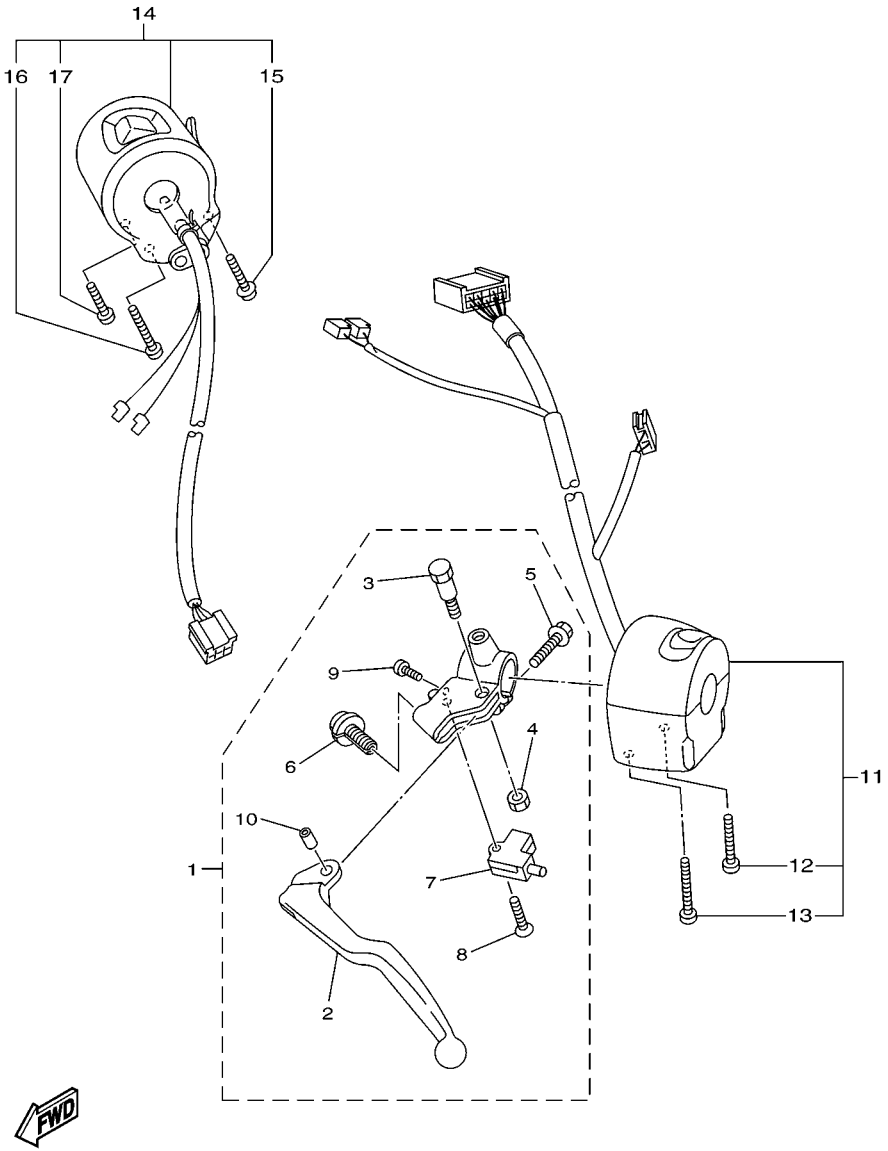

36P1110-H450

FIG. 45 HANDLE SWITCH & LEVER

REF. NO.	PART NO.	DESCRIPTION	36P4	36P5				REMARKS
1	5VX–82910–01	LEVER HOLDER ASSY (LEFT)	1	1				
2	5EB–83912–03	.LEVER 1	1	1				
3	4XV–83945–00	.BOLT, LEVER	1	1				
4	95607–06100	.NUT, U	1	1				
5	95027–06020	.BOLT, FLANGE	1	1				
6	5LV–83951–00	.BOLT, CABLE ADJUSTING	1	1				
7	3YX–82917–01	.SWITCH	1	1				
8	98704–03020	.SCREW, FLAT HEAD	1	1				
9	98507–04010	.SCREW, PAN HEAD	1	1				
10	5JJ–83913–00	.COLLAR, LEVER 1	1	1				
11	36P–83963–00	SWITCH, HANDLE 3	1	1				
12	98507–05030	.SCREW, PAN HEAD	1	1				
13	98507–05045	.SCREW, PAN HEAD	1	1				
14	5VX–83975–01	SWITCH, HANDLE 2	1	1				
15	97607–05255	.SCREW,WITH WASHER	1	1				
16	98507–05045	.SCREW, PAN HEAD	1	1				
17	98507–05020	.SCREW, PAN HEAD	1	1				

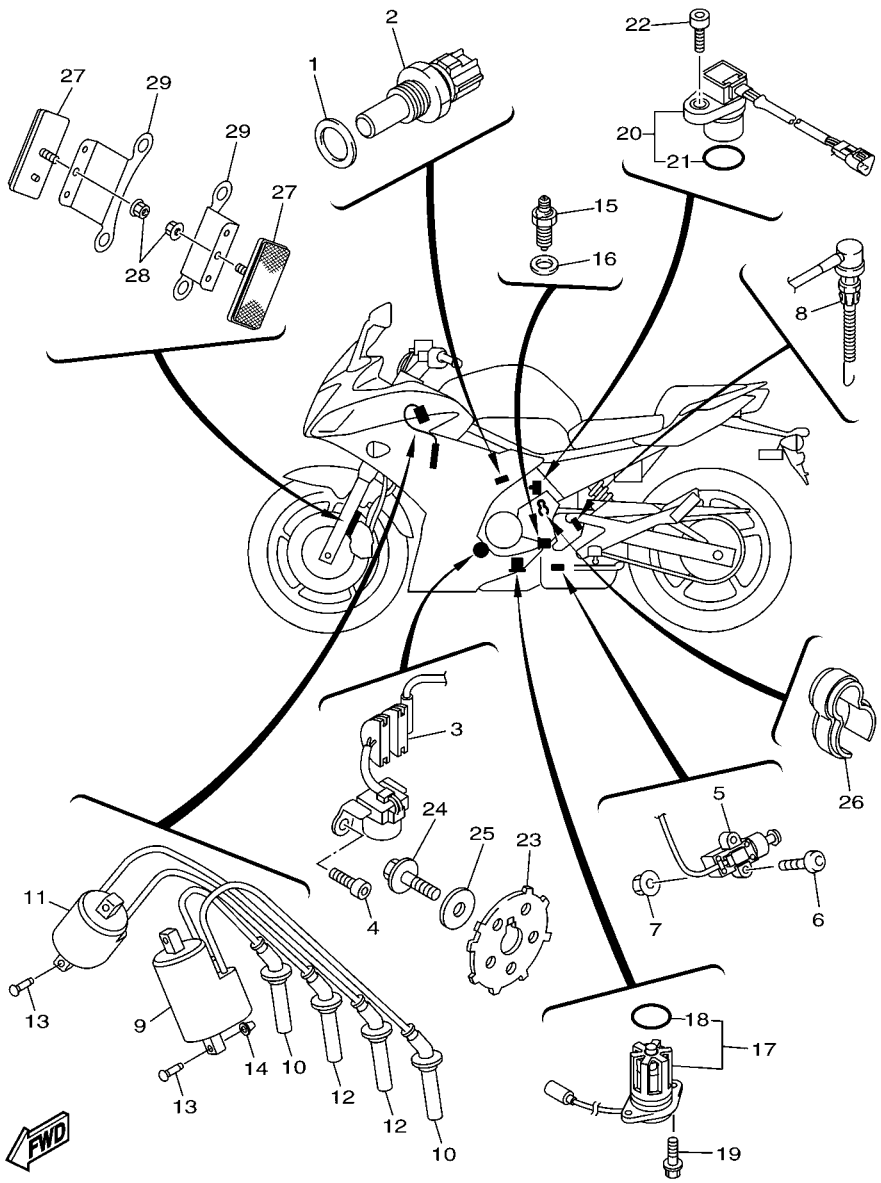

36P1110-H460

FIG. 46 ELECTRICAL 1

REF. NO.	PART NO.	DESCRIPTION	36P4	36P5				REMARKS
1	90201–12790	WASHER, PLATE	1	1				
2	8CC–85790–01	THERMOSENSOR ASSY	1	1				
3	20S–81670–00	PICK-UP ASSY	1	1				
4	90110–06161	BOLT, HEXAGON SOCKET HEAD	2	2				
5	20S–82566–60	SWITCH, SIDE STAND	1	1				
6	92012–05025	BOLT, BUTTON HEAD	2	2				
7	95602–05200	NUT, SELF-LOCKING	2	2				
8	20S–82530–00	STOP SWITCH ASSY	1	1				
9	20S–82310–00	IGNITION COIL ASSY	1	1				
10	20S–82370–01	PLUG CAP ASSY	2	2				
11	20S–82320–00	IGNITION COIL ASSY	1	1				
12	20S–82370–01	PLUG CAP ASSY	2	2				
13	97702–60525	SCREW, TAPPING	2	2				
14	90338–08226	PLUG	2	2				
15	3GB–82540–01	NEUTRAL SWITCH ASSY	1	1				
16	90430–10148	GASKET	1	1				
17	5VX–85720–01	OIL LEVEL GAUGE ASSY	1	1				
18	5VY–8A8E0–00	.O-RING	1	1				
19	90105–06187	BOLT, FLANGE	2	2				
20	4WM–83755–02	SENSOR, SPEED	1	1				
21	4D9–81168–00	.O-RING	1	1				
22	91312–06016	BOLT	1	1				
23	20S–81673–00	ROTOR	1	1				
24	90105–08113	BOLT, FLANGE	1	1				
25	90201–08054	WASHER, PLATE	1	1				
26	90464–15065	CLAMP	1	1				
27	11H–85110–01	REFLECTOR ASSY	2	2				

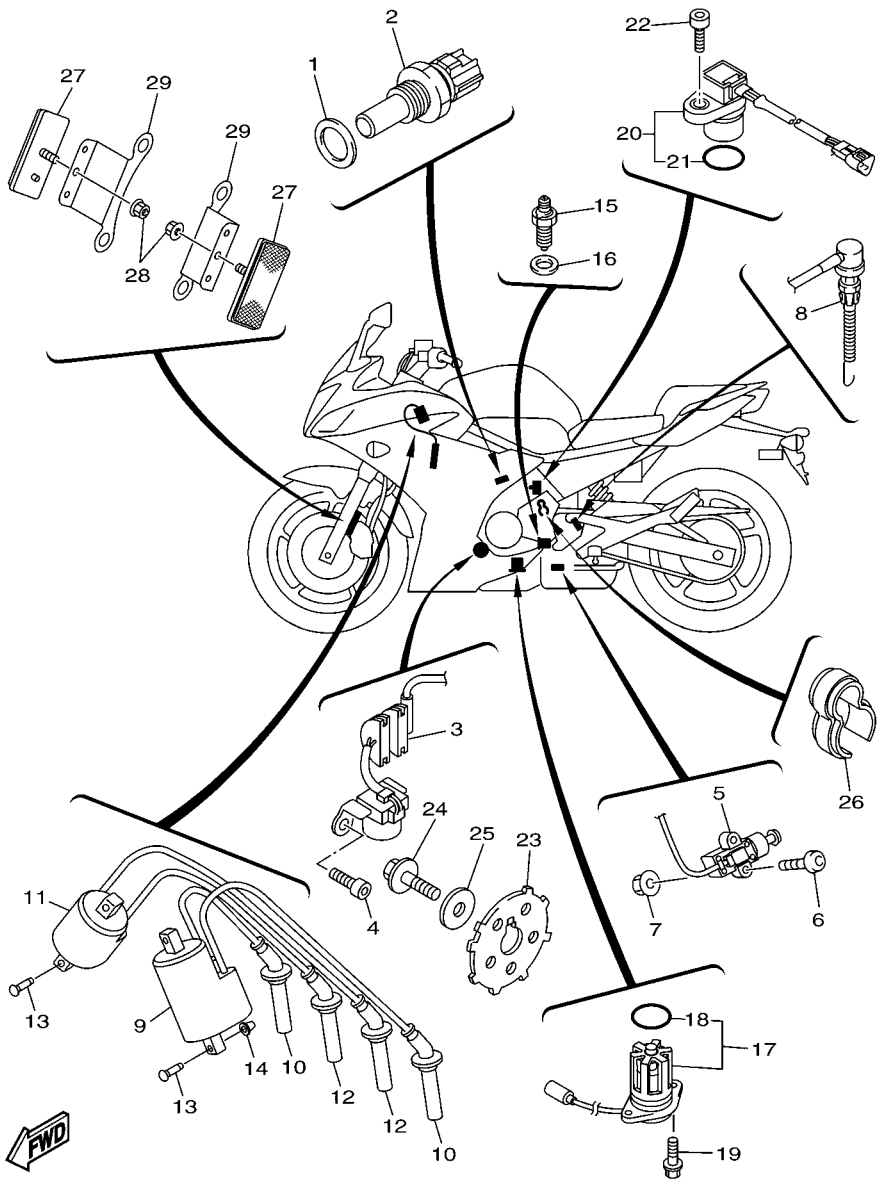

36P1110-H460

FIG. 46 ELECTRICAL 1

REF. NO.	PART NO.	DESCRIPTION	36P4	36P5				REMARKS
28	95602–05200	NUT, SELF-LOCKING	2	2				
29	36P–85112–00	BRACKET, REFLECTOR 1	2	2				

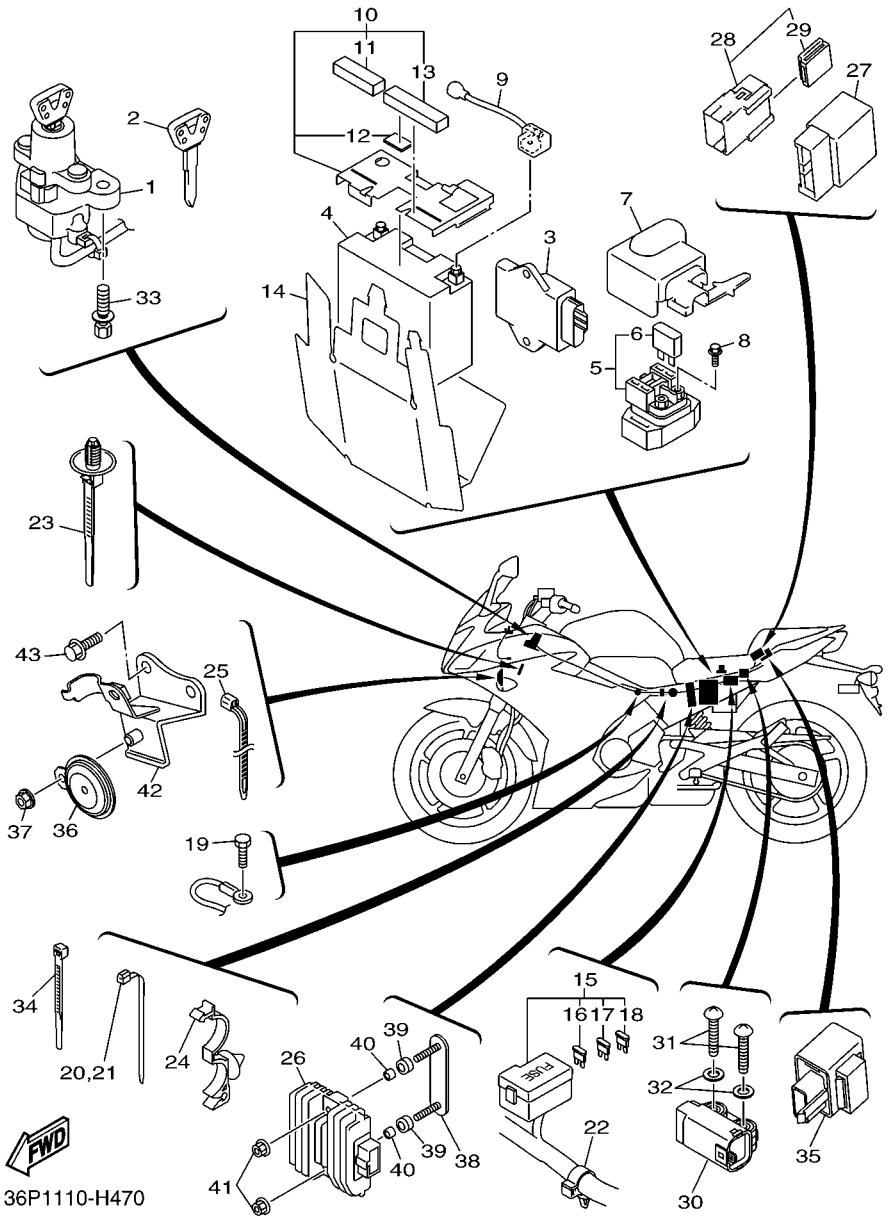

FIG. 47 ELECTRICAL 2

REF. NO.	PART NO.	DESCRIPTION	36P4	36P5				REMARKS
1	36P–82501–00	MAIN SWITCH STEERING LOCK	1	1				
2	4BH–82511–09	BLANK KEY	1	1				AP
3	36P–8591A–00	ENGINE CONTROL UNIT ASSY	1	1				
4	4TX–82100–02	BATTERY ASSY (GS GT12B-4)	1	1				
5	4SV–81940–12	STARTER RELAY ASSY	1	1				
6	1AE–82151–00	.FUSE (30A-BL)	2	2				
7	20S–82119–00	COVER, LEAD WIRE	1	1				
8	95022–06008	BOLT, FLANGE	2	2				
9	20S–82115–00	WIRE, PLUS LEAD	1	1				
10	20S–82160–00	BATTERY COVER ASSY	1	1				
11	5VK–21746–00	.DAMPER	1	1				
12	5HN–2139X–00	.DAMPER	1	1				
13	90520–15002	.DAMPER, PLATE	1	1				
14	20S–82122–00	SEAT, BATTERY	1	1				
15	36P–82590–00	WIRE HARNESS ASSY	1	1				
16	5JJ–82151–10	.FUSE (15A-BL)	3	3				
17	5JJ–82151–20	.FUSE (20A-BL)	2	2				
18	5JJ–82151–30	.FUSE (10A-BL)	4	4				
19	91380–06012	BOLT	1	1				
20	90464–13077	CLAMP	1	1				
21	90464–13077	CLAMP	1	1				
22	90464–20010	CLAMP	2	2				
23	90464–20213	CLAMP	2	2				
24	90464–20010	CLAMP	1	1				
25	90464–15195	CLAMP	1	1				
26	5SL–81960–00	RECTIFIER & REGULATOR ASSY	1	1				
27	5VK–81950–40	RELAY ASSY	1	1				

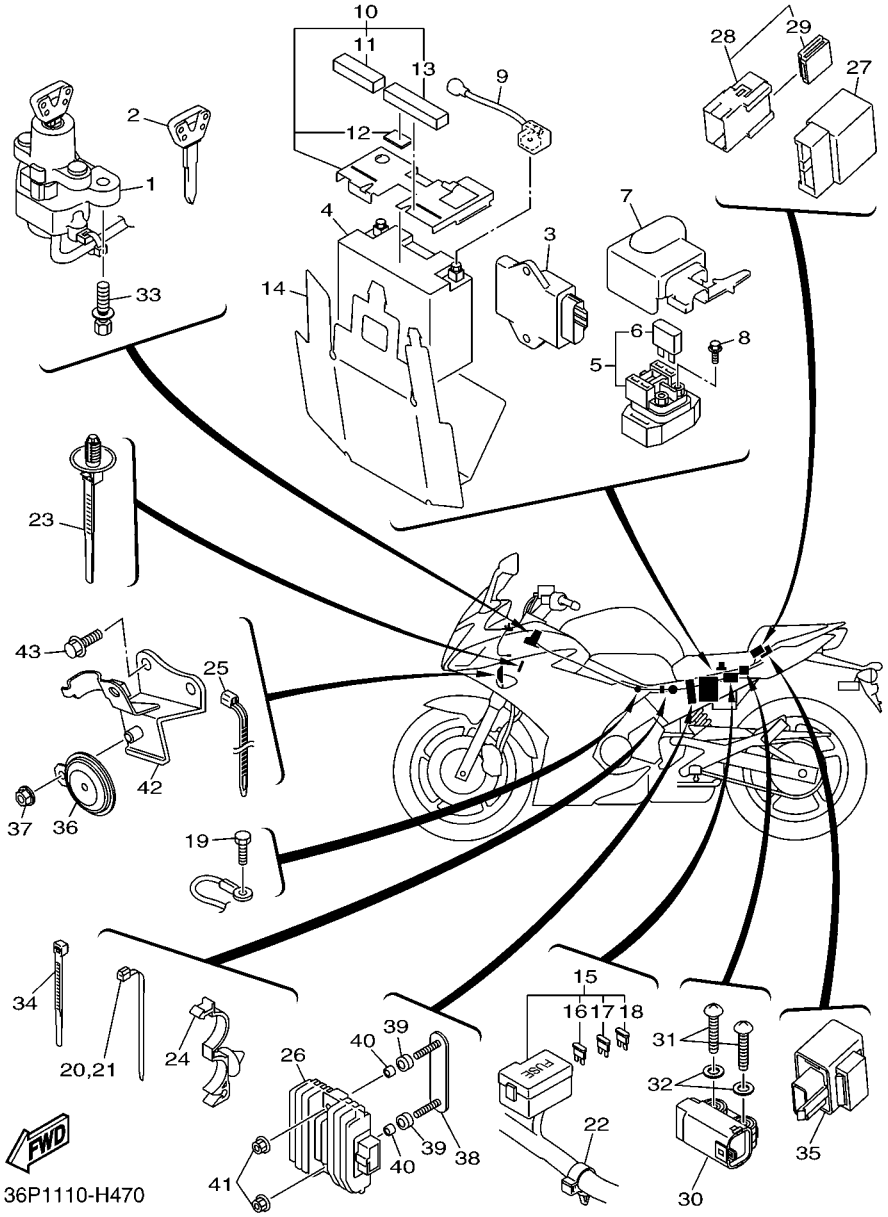

FIG. 47 ELECTRICAL 2

REF. NO.	PART NO.	DESCRIPTION	36P4	36P5				REMARKS
28	5JJ–81950–20	RELAY ASSY	2	2				
29	5JJ–81952–00	.HOLDER, RELAY	1	1				
30	5PS–82576–01	SENSOR, LEAN ANGLE	1	1				
31	90160–04009	SCREW, ROUND TAPPING	2	2				
32	90201–04030	WASHER, PLATE	2	2				
33	90109–08195	BOLT	2	2				
34	90465–15011	CLAMP	1	1				
35	3GM–83350–01	FLASHER RELAY ASSY	1	1				
36	20S–83371–00	HORN	1	1				
37	95702–08500	NUT, WITH WASHER	1	1				
38	20S–21689–00	BRACKET, REAR STAY 2	1	1				
39	90480–16007	GROMMET	2	2				
40	90387–064T3	COLLAR	2	2				
41	95702–06500	NUT, FLANGE	2	2				
42	20S–23377–00	BRACKET, HORN	1	1				
43	95802–06016	BOLT, FLANGE	2	2				

PART NO.	REF. NO.
20S–11101–00	1 – 1
5VY–1111G–00	1 – 23
5EB–11133–10	1 – 2
20S–11134–10	1 – 3
20S–11165–00	13 – 16
20S–11181–00	1 – 14
1B3–11191–00	1 – 15
20S–11193–00	1 – 17
214–11198–01	8 – 11
20S–11411–00	2 – 1
5EB–11416–00	2 – 5
5EB–11416–10	2 – 5
5EB–11416–20	2 – 5
5EB–11416–30	2 – 5
5EB–11416–A0	2 – 5
20S–11603–00	2 – 7
5SL–11631–00	2 – 6
20S–11633–00	2 – 9
5VX–11650–00	2 – 2
5VX–11654–00	2 – 3
5VX–11656–00	2 – 4
5VX–11656–10	2 – 4
5VX–11656–20	2 – 4
5VX–11656–30	2 – 4
20S–12111–00	3 – 1
20S–12113–00	3 – 4
1HX–12118–00	3 – 6
4TV–12119–00	3 – 7
20S–12121–00	3 – 2
5EB–12126–00	3 – 3
5EB–12127–00	3 – 5
5EB–12153–09	3 – 9
5EB–12153–10	3 – 9
1HX–12168–00	3 – 8
1HX–12168–20	3 – 8
1HX–12168–40	3 – 8
1HX–12168–60	3 – 8
1HX–12168–80	3 – 8
1HX–12168–A0	3 – 8
1HX–12168–F0	3 – 8
1HX–12168–H1	3 – 8
1HX–12168–K1	3 – 8
1HX–12168–M1	3 – 8
1HX–12168–R1	3 – 8
1HX–12168–U1	3 – 8
1HX–12168–W1	3 – 8
1HX–12168–Y1	3 – 8
1HX–12169–11	3 – 8

PART NO.	REF. NO.
1HX–12169–31	3 – 8
1HX–12169–50	3 – 8
1HX–12169–70	3 – 8
1HX–12169–90	3 – 8
1HX–12169–E0	3 – 8
1HX–12169–G0	3 – 8
1HX–12169–J0	3 – 8
1HX–12169–L0	3 – 8
1HX–12169–N0	3 – 8
1HX–12169–T0	3 – 8
20S–12170–00	4 – 1
20S–12176–00	4 – 3
20S–12180–00	4 – 2
20S–12210–00	4 – 6
2C0–12213–00	4 – 7
5BE–12241–00	1 – 16
2C0–12251–00	4 – 9
13S–12252–00	4 – 10
20S–12405–00	6 – 17
5SL–12410–00	6 – 1
5VX–12413–00	6 – 2
20S–12420–00	5 – 1
5SL–12422–00	5 – 5
4C8–12438–00	5 – 4
5EB–12439–00	5 – 6
5VX–1243A–00	5 – 25
20S–1243E–00	10 – 26
20S–1244E–00	6 – 31
20S–12450–00	5 – 11
20S–12461–01	6 – 16
22W–12462–00	6 – 28
5EB–12469–00	5 – 23
20S–1246E–00	6 – 7
	6 – 10
5GV–1246E–00	5 – 19
1AA–12535–00	6 – 21
20S–12551–00	6 – 8
5EB–12577–01	5 – 15
20S–12578–00	6 – 5
20S–12579–00	6 – 22
4NK–12579–00	5 – 13
20S–12581–00	5 – 14
20S–12582–00	6 – 4
5SL–12588–01	5 – 17
20S–12589–00	6 – 33
5EB–12822–00	8 – 2
5VX–13160–00	10 – 27
5EB–13161–00	7 – 12

PART NO.	REF. NO.
5EB–1316E–00	7 – 13
5MT–13300–00	7 – 1
20S–13400–00	8 – 9
5SL–13410–00	7 – 4
20S–13414–00	8 – 12
5EB–13415–00	7 – 5
2C0–13416–00	7 – 9
5GH–13440–20	8 – 5
5EB–13470–00	8 – 1
5JW–13473–00	8 – 4
5EB–13475–00	8 – 3
3KS–13490–00	8 – 7
5VX–13533–00	10 – 29
68V–13533–00	10 – 18
8FP–13556–00	10 – 3
20S–13586–00	9 – 1
20S–13596–00	9 – 2
20S–13750–00	10 – 1
36P–13750–00	10 – 1
5VX–13761–00	10 – 4
5EB–13898–00	7 – 7
20S–13907–00	27 – 9
5VX–13971–00	27 – 26
5JW–14104–00	10 – 22
5VX–1410E–00	10 – 19
4KM–14137–00	10 – 21
3H1–14147–00	10 – 23
5PS–14147–00	10 – 5
5VX–14148–01	9 – 23
5VX–14149–00	10 – 8
3XV–14251–00	10 – 16
5PW–14251–00	10 – 20
5VX–14348–00	10 – 2
5FL–14348–10	10 – 17
5VX–14349–00	10 – 24
5VX–14396–00	10 – 12
20S–14411–00	9 – 5
20S–14421–00	9 – 6
4D9–1443E–00	9 – 13
20S–14451–00	9 – 9
20S–14452–00	9 – 7
20S–14453–00	9 – 11
20S–14457–00	9 – 10
20S–14463–00	9 – 12
5VX–14465–01	10 – 33
36P–14466–00	27 – 46
5VX–14503–00	10 – 31
5VX–14565–00	10 – 9

PART NO.	REF. NO.
3YF–14613–01	12 – 2
36P–14703–00	12 – 1
5JW–14723–00	11 – 7
20S–14799–00	12 – 8
5VX–14807–00	10 – 30
5SL–1482K–00	1 – 18
20S–14840–00	11 – 1
20S–14881–00	11 – 2
20S–14882–00	11 – 4
20S–14883–00	11 – 6
5SL–14890–00	1 – 19
5SL–14899–00	1 – 20
3UH–14937–00	10 – 13
5VX–14987–00	10 – 14
20S–15100–01	13 – 1
5EB–15155–00	13 – 2
20S–15163–00	17 – 12
20S–15185–00	14 – 36
36Y–15189–00	13 – 21
5SL–15189–00	13 – 5
3F9–15362–00	14 – 11
5EB–15362–00	13 – 23
20S–15373–00	9 – 17
20S–15377–00	14 – 35
36P–15411–00	14 – 1
20S–15413–00	13 – 18
36P–15416–00	14 – 16
20S–15418–00	14 – 7
36P–15421–00	14 – 10
20S–15425–00	14 – 26
20S–15441–00	14 – 34
5VX–15451–01	14 – 2
20S–15456–00	14 – 23
20S–15461–00	14 – 13
20S–15462–00	13 – 19
5VX–15484–00	39 – 4
20S–15512–00	15 – 1
5MT–15515–00	15 – 4
5EB–15521–00	15 – 2
20S–15544–00	13 – 25
5SL–15590–00	15 – 3
20S–16150–00	16 – 1
5EB–16154–00	16 – 2
1AE–16164–00	16 – 27
4H7–16321–02	16 – 9
5LV–16321–20	16 – 15
3J2–16324–00	16 – 7
	16 – 10

PART NO.	REF. NO.
5Y1–16331–01	16 – 6
132–16346–00	19 – 2
20S–16351–00	16 – 11
20S–16356–00	16 – 29
20S–16357–00	16 – 22
20S–16358–00	16 – 30
20S–16371–10	16 – 3
20S–16380–00	16 – 24
5LV–16383–00	16 – 5
20S–16384–00	14 – 30
20S–16384–10	16 – 4
1J7–16385–00	16 – 8
20S–17121–00	17 – 11
20S–17131–00	17 – 6
20S–17151–00	17 – 3
20S–17161–00	17 – 8
20S–17211–00	17 – 31
20S–17221–00	17 – 20
20S–17231–00	17 – 28
20S–17241–00	17 – 25
20S–17251–00	17 – 29
20S–17261–00	17 – 23
20S–17411–00	17 – 1
4S8–17421–00	17 – 16
278–17424–01	17 – 38
20S–17460–00	17 – 33
20S–18101–00	19 – 4
20S–18110–00	19 – 17
20S–18112–00	19 – 14
5EB–18113–00	19 – 18
	36 – 14
3D8–18115–00	19 – 23
5VX–18116–00	19 – 26
1D7–18127–00	19 – 3
20S–18140–00	19 – 7
5VX–18154–00	19 – 27
2C0–18175–00	19 – 6
20S–18511–00	18 – 3
20S–18512–00	18 – 4
20S–18513–00	18 – 5
2C0–18535–00	18 – 6
2C0–18536–00	18 – 7
20S–18540–00	18 – 1
136–18542–00	18 – 2
2C0–18562–00	18 – 8
36P–21110–10	20 – 1
20S–21136–00	20 – 2
36P–2115J–00	21 – 31

PART NO.	REF. NO.
3D8–2117G–00	20 – 16
20S–2117K–00	28 – 16
20S–2117N–00	20 – 10
20S–2117R–00	20 – 12
20S–2117T–00	20 – 13
36P–2117U–00	20 – 17
5GK–2118K–00	27 – 36
20S–21228–00	36 – 27
20S–21249–00	20 – 14
20S–21296–00	27 – 22
20S–21308–00	28 – 33
3YX–21376–00	21 – 28
5HN–2139X–00	47 – 12
20S–21445–00	12 – 4
20S–2144G–00	35 – 57
4RR–21485–00	35 – 2
	35 – 36
5VX–21511–A0–P1	21 – 1
5VX–21511–A0–P4	21 – 1
36P–2153E–20	38 – 8
	38 – 30
20S–21611–00	21 – 8
20S–21629–10	21 – 16
2C0–2162G–00	38 – 26
36P–21639–00	21 – 34
20S–2163A–00	22 – 3
20S–2163E–00	22 – 9
36P–2164F–00	21 – 41
36P–2164G–00	21 – 42
3XW–21668–A1	23 – 21
20S–21677–00	21 – 29
5VX–21684–00	21 – 37
5SL–21686–00	23 – 23
20S–21688–00	21 – 20
20S–21689–00	47 – 38
20S–21711–00–P4	22 – 1
20S–21711–00–P5	22 – 1
1FK–2171M–00	37 – 22
36P–2171N–00	38 – 13
36P–2171R–00	38 – 34
20S–21721–00–P4	22 – 7
20S–21721–00–P5	22 – 7
36P–2172R–00	37 – 23
36P–2172T–00	37 – 28
20S–2172U–00	22 – 19
4P5–2172W–00	6 – 45
20S–21730–00	22 – 15
20S–2173T–00	27 – 33

PART NO.	REF. NO.
20S–2173U–00	27 – 35
20S–21740–00	22 – 21
5VK–21746–00	47 – 11
5JW–2174X–00	21 – 12
5PW–2174X–00	22 – 5
	22 – 11
36P–2176P–00	23 – 22
5VX–2178A–00	21 – 38
36P–2179W–00	23 – 22
26H–21828–00	6 – 40
20S–21843–00	38 – 45
4P5–21871–00	6 – 39
4P5–21873–00	6 – 46
3P6–21875–00	6 – 42
20S–22110–00	23 – 1
5VK–22124–00	23 – 2
1AE–22141–00	23 – 10
20S–22151–00	23 – 7
1UF–22174–01	31 – 21
30X–2219X–00	23 – 5
20S–22210–10	24 – 1
34L–22216–00	24 – 3
20S–22243–00	24 – 7
20S–22311–00	23 – 12
20S–22325–01	23 – 17
36P–22863–00	38 – 47
20S–23102–00	26 – 1
20S–23103–00	26 – 21
20S–23110–00	26 – 2
	26 – 22
3VD–23115–00	26 – 10
	26 – 30
5VU–23118–00	26 – 18
	26 – 38
5VU–2311H–00	26 – 14
	26 – 34
4KM–23123–01	26 – 46
3VD–23125–10	26 – 8
	26 – 28
20S–23126–00	26 – 5
3VD–23135–10	26 – 3
	26 – 23
20S–23136–00	26 – 25
20S–23141–00	26 – 13
	26 – 33
5VU–23142–00	26 – 19
	26 – 39
3VD–23144–00	26 – 12

PART NO.	REF. NO.
3VD–23144–00	26 – 32
5VU–23145–00	26 – 9
	26 – 29
3VD–23151–00	26 – 6
	26 – 26
3VD–23156–00	26 – 11
	26 – 31
20S–23170–00	26 – 4
	26 – 24
5VU–23173–00	26 – 7
	26 – 27
36P–23318–00	25 – 19
4TX–2331G–00	26 – 20
	26 – 40
20S–23340–10	26 – 42
20S–23377–00	47 – 42
1W1–23416–00	25 – 3
26H–23418–01	25 – 6
4H7–23441–01–98	25 – 16
5LV–23442–01	25 – 12
3FV–23462–00	26 – 45
341–23469–00	25 – 18
20S–24106–00	27 – 32
20S–24108–00	27 – 34
5JW–2413B–00	27 – 37
20S–2413Y–00	27 – 17
20S–2414H–00	27 – 21
5C7–24170–00	27 – 38
5RB–24180–00	27 – 43
20S–24181–00	27 – 20
5VX–24181–00	27 – 14
4C8–24182–00	22 – 12
20S–24183–00	27 – 7
20S–24191–00	27 – 3
36P–2419F–00	27 – 39
36P–24240–00	27 – 2
36P–24314–00	27 – 45
36P–24315–00	27 – 47
68V–24376–00	10 – 15
4KM–24453–00	10 – 7
5JW–24486–00	27 – 11
13S–24491–00	27 – 10
5JJ–24602–00	27 – 23
36P–24667–00	27 – 50
36P–2470F–00	28 – 20
36P–2470H–00	28 – 2
36P–24710–00	28 – 19
36P–24718–00	28 – 21

PART NO.	REF. NO.
36P–24724–00	28 – 7
36P–24728–00	28 – 8
4NK–24728–00	28 – 3
2GH–24741–00	28 – 23
36P–24750–00	28 – 1
36P–2475B–00	28 – 30
20S–24773–00	22 – 26
50W–24780–01	28 – 10
5JW–2478E–00	28 – 14
36P–2478X–00	28 – 12
20S–24792–00	21 – 32
	28 – 11
3TB–24877–A0	21 – 36
20S–25117–00	29 – 4
20S–25168–00–98	29 – 1
20S–25181–00	29 – 10
20S–25183–00	29 – 9
	31 – 18
146–25315–00	29 – 5
20S–25317–00	31 – 5
20S–25338–00–98	31 – 1
1UF–2533A–01	31 – 24
1UF–2533E–01	31 – 25
20S–25364–00	31 – 6
20S–25366–00	31 – 10
20S–25377–00	31 – 17
20S–2537W–00	34 – 23
20S–25381–00	31 – 26
20S–25383–00	31 – 12
1UF–25388–01	31 – 20
5MT–25398–00	29 – 8
	31 – 9
5MT–25398–10	29 – 8
	31 – 9
5MT–25398–20	29 – 8
	31 – 9
20S–25446–00	31 – 14
5VX–2580T–00	30 – 5
5VX–2580U–00	30 – 14
20S–2580W–00	32 – 3
20S–2581K–00	36 – 23
20S–2581T–00	30 – 1
1UY–25824–51	32 – 16
1UY–25825–51	32 – 17
2D1–2582A–00	36 – 3
20S–2582W–00	32 – 1
5SL–25838–00	32 – 7
2D1–2583V–00	36 – 1

PART NO.	REF. NO.
5SL–25852–00	36 – 10
5VS–25852–00	34 – 3
20S–25854–00	34 – 5
5SL–25854–00	36 – 8
5SL–25855–00	36 – 9
5VS–25855–00	34 – 4
4BP–2585F–01	36 – 4
5VS–25867–00	34 – 11
20S–25872–00	34 – 16
20S–25873–00	34 – 17
20S–25876–00	34 – 25
5SL–25876–00	34 – 21
20S–2587A–00	36 – 30
4P5–25894–00	36 – 7
20S–25895–00	36 – 12
5VS–2589F–00	34 – 7
5VS–2589H–00	34 – 6
5SL–25914–00	32 – 9
5JW–25914–10	30 – 8
	30 – 17
5DH–25916–00	32 – 14
3JD–25917–00	32 – 11
5SL–25917–00	32 – 6
4BP–25919–00	30 – 11
	30 – 20
5SL–25919–00	32 – 8
20S–25921–50	32 – 10
8CR–25924–00	32 – 13
5SL–25926–00	32 – 15
3YX–25929–00	30 – 12
	30 – 21
4TT–25937–00	30 – 9
	30 – 18
20S–26111–00	33 – 1
4YR–26240–02	33 – 3
4YR–26241–02	33 – 2
51J–26246–01	33 – 4
36P–26280–00	37 – 46
36P–26290–00	37 – 47
3C3–26298–00	37 – 49
36P–26311–00	33 – 5
36P–26312–00	33 – 6
5VS–26332–00	34 – 10
20S–26335–00	33 – 7
4D9–27114–00	28 – 5
	28 – 22
20S–27200–00	36 – 13
4BP–27222–02	36 – 5

PART NO.	REF. NO.
20S–27311–00	35 – 4
5VX–27315–00	35 – 10
20S–27321–00	35 – 5
5VX–27351–00	35 – 9
4BP–27413–00	35 – 17
	35 – 28
	35 – 42
	35 – 53
5LV–2741E–01	35 – 31
	35 – 56
5VX–27424–00	35 – 21
	35 – 46
5RT–27431–00	35 – 22
4BP–27434–01	19 – 21
5VX–27437–00	35 – 25
	35 – 50
5RT–27441–00	35 – 47
20S–27442–00	35 – 20
20S–27443–00	35 – 45
4BH–27451–01	35 – 13
20S–27453–00	35 – 32
4BH–27461–01	35 – 38
20S–27463–00	35 – 59
20S–274A3–00	35 – 1
20S–274A4–00	35 – 35
20S–28100–00	28 – 32
4B5–2815K–00	37 – 51
36P–2830N–00	37 – 10
36P–2830R–00	37 – 15
36P–2831Y–00	38 – 5
36P–2832B–00	38 – 27
36P–2832C–00	38 – 6
36P–2832D–00	38 – 28
36P–2832K–00	38 – 6
36P–2832L–00	38 – 28
36P–2832P–00	38 – 7
36P–2833A–00	38 – 17
36P–2833E–00	38 – 38
36P–28356–00	37 – 39
36P–2836A–00	38 – 19
8GC–2836B–01	21 – 24
36P–2836E–00	38 – 41
36P–2836K–00	37 – 31
36P–2836L–00	37 – 35
36P–2836M–00	37 – 37
36P–2836N–00	38 – 49
36P–2836R–00	38 – 52
20S–28376–00	37 – 20

PART NO.	REF. NO.
36P–2837J–00	37 – 43
36P–2837N–00	37 – 13
36P–2837R–00	37 – 18
36P–28381–00	37 – 1
36P–28396–00	43 – 5
36P–2839G–00	38 – 5
36P–2839J–00	38 – 27
36P–283B3–00	38 – 29
3JJ–28446–A1	21 – 35
4D9–81168–00	46 – 21
20S–81410–00	39 – 6
5VX–81450–00	39 – 1
20S–81670–00	46 – 3
20S–81673–00	46 – 23
4WP–81801–00	40 – 3
5VX–81815–00	40 – 7
4WP–81826–00	40 – 2
4XV–8182A–00	40 – 5
	40 – 8
4WP–81844–00	40 – 4
1FK–81847–00	40 – 6
2C0–81890–00	40 – 1
4SV–81940–12	47 – 5
5JJ–81950–20	47 – 28
5VK–81950–40	47 – 27
5JJ–81952–00	47 – 29
5SL–81960–00	47 – 26
4TX–82100–02	47 – 4
20S–82115–00	47 – 9
20S–82119–00	47 – 7
20S–82122–00	47 – 14
120–82131–00	21 – 10
1AE–82151–00	47 – 6
5JJ–82151–10	47 – 16
5JJ–82151–20	47 – 17
5JJ–82151–30	47 – 18
20S–82160–00	47 – 10
20S–82310–00	46 – 9
20S–82320–00	46 – 11
20S–82370–01	46 – 10
	46 – 12
20S–82386–00	10 – 28
36P–82501–00	47 – 1
4BH–82511–09	47 – 2
20S–82530–00	46 – 8
3GB–82540–01	46 – 15
36P–82552–00	25 – 11
20S–82566–60	46 – 5

PART NO.	REF. NO.
5PS–82576–01	47 – 30
36P–82590–00	47 – 15
5VX–82910–01	45 – 1
3YX–82917–01	45 – 7
2C0–83310–10	41 – 1
306–83311–40	41 – 12
	41 – 16
2C0–83318–00	41 – 5
	41 – 10
3D7–83318–10	41 – 19
2C0–83320–10	41 – 6
2C0–83330–10	41 – 11
3P6–83331–10	44 – 13
2C0–8333A–10	41 – 3
	41 – 17
2C0–83340–10	41 – 15
2C0–8334A–10	41 – 8
	41 – 13
3GM–83350–01	47 – 35
20S–83371–00	47 – 36
36P–83500–10	42 – 1
3C3–83513–00	37 – 40
36P–83559–00	37 – 5
36P–83615–00	42 – 4
4WM–83755–02	46 – 20
5EB–83912–03	45 – 2
5JJ–83913–00	45 – 10
5VS–83922–00	34 – 9
4XV–83945–00	45 – 3
5LV–83951–00	45 – 6
36P–83963–00	45 – 11
5VX–83975–01	45 – 14
4HM–83980–00	34 – 12
36P–84118–00	43 – 7
36P–84119–00	43 – 11
36P–84300–00	43 – 1
4K0–84314–G0	43 – 2
36P–84359–00	43 – 15
5JW–84397–00	43 – 3
36P–84519–00	44 – 15
3F9–84553–00	44 – 8
20S–84710–00	44 – 11
1A2–84714–41	41 – 2
	41 – 7
20S–84735–00	44 – 12
4HC–84744–00	44 – 2
5VX–84745–01	44 – 1
5MT–84751–00	21 – 46

PART NO.	REF. NO.
20S–84753–00	44 – 7
5SL–84753–00	37 – 9
11H–85110–01	46 – 27
36P–85112–00	46 – 29
3Y6–85130–02	21 – 17
	21 – 39
5VX–85720–01	46 – 17
8CC–85790–01	46 – 2
2D1–85885–00	10 – 6
8FP–85886–00	9 – 19
36P–8591A–00	47 – 3
5VY–8A8E0–00	46 – 18
2D1–W0041–00	34 – 2
5VX–W0042–50	36 – 2
5VX–W0045–00	30 – 10
	30 – 19
20S–W0046–00	32 – 12
4FU–W0047–00	30 – 7
	30 – 16
5SL–W0047–00	32 – 5
51L–W0048–00	30 – 13
	30 – 22
5KS–W0057–00	30 – 6
	30 – 15
5SL–W0057–00	32 – 4
20S–W2341–10	25 – 9
2TV–W2470–00	28 – 15
36C–W2587–00	34 – 1
20S–Y2410–00–04	27 – 1
36P–Y283G–20–P2	37 – 4
36P–Y283G–20–P3	37 – 4
36P–Y283U–20–P2	38 – 1
36P–Y283U–30–P3	38 – 1
36P–Y283V–20–P2	38 – 22
36P–Y283V–30–P3	38 – 22
20S–YK241–00–P1	27 – 1
90105–06027	1 – 5
90105–06053	5 – 24
90105–060A6	6 – 50
90105–06122	28 – 26
90105–06145	13 – 15
90105–06164	6 – 3
90105–06187	46 – 19
90105–07004	4 – 4
90105–08113	46 – 24
90105–08164	12 – 5
90105–10297	20 – 4
90105–10365	35 – 6

PART NO.	REF. NO.
90105–10638	30 – 3
	30 – 4
90105–126A8	39 – 2
90109–060E9	38 – 20
	38 – 43
90109–06168	13 – 11
90109–06236	28 – 31
90109–064G6	30 – 2
90109–066F0	1 – 22
90109–08195	47 – 33
90109–08203	35 – 19
	35 – 44
90109–083G4	32 – 2
90109–125F1	24 – 4
90110–05028	27 – 12
90110–05112	27 – 24
90110–06086	5 – 12
90110–06161	7 – 8
	7 – 11
	14 – 18
	46 – 4
90110–06172	28 – 28
90110–06182	18 – 9
90110–06233	9 – 25
90110–06249	36 – 17
90110–06274	14 – 24
90110–06295	14 – 4
	14 – 15
90110–06307	14 – 33
90110–06329	14 – 8
90110–06330	14 – 9
90110–06335	4 – 8
90110–10N52	26 – 17
	26 – 37
90111–05007	38 – 10
	38 – 32
90111–05030	44 – 5
90111–05034	37 – 32
	37 – 36
	37 – 38
	38 – 48
90111–06038	22 – 18
	22 – 24
90111–06098	19 – 28
90111–06127	27 – 13
90111–08066	35 – 33
	35 – 60
90111–10036	35 – 37

PART NO.	REF. NO.
90111–10043	35 – 3
90111–10045	35 – 12
90116–10048	31 – 15
90119–06062	27 – 6
90119–06137	36 – 26
90119–06147	23 – 8
90119–06154	23 – 15
	23 – 18
90119–06252	16 – 14
90119–08083	13 – 7
90119–08084	13 – 8
90119–10003	1 – 11
90149–06071	39 – 5
90149–06081	28 – 18
90149–06082	13 – 6
	13 – 17
90149–06093	39 – 7
90149–06302	38 – 9
	38 – 15
	38 – 31
	38 – 36
90149–08030	39 – 8
90150–05023	37 – 2
90151–06024	17 – 15
90153–06034	36 – 29
90154–06061	21 – 5
90157–05025	35 – 18
	35 – 43
90159–05004	35 – 30
	35 – 55
90159–05187	35 – 29
	35 – 54
90160–04009	47 – 31
90160–05012	21 – 22
	42 – 2
90164–05001	44 – 17
90170–06026	19 – 24
90170–08010	36 – 6
90176–22081	25 – 8
90179–05523	37 – 3
90179–08410	12 – 3
90179–10658	20 – 5
90179–20007	16 – 18
90179–20011	17 – 35
90179–25033	25 – 4
90183–05008	37 – 12
	37 – 17
90183–05042	37 – 7

PART NO.	REF. NO.
90183–05076	37 – 8
	37 – 11
	37 – 16
	38 – 4
	38 – 25
90183–05M02	37 – 6
	38 – 50
	38 – 53
90183–06053	21 – 9
90183–06069	43 – 4
90185–10023	35 – 7
90185–14012	23 – 11
90185–16002	31 – 27
90201–04030	47 – 32
90201–05025	44 – 10
90201–05036	42 – 3
90201–05043	21 – 19
	44 – 6
90201–06088	21 – 47
90201–08053	19 – 22
90201–08054	46 – 25
90201–08066	36 – 19
90201–10030	20 – 9
90201–10035	35 – 63
90201–10051	20 – 6
	35 – 11
90201–10141	25 – 14
90201–12008	39 – 3
90201–12050	24 – 5
90201–12051	19 – 19
90201–12575	19 – 12
90201–12790	46 – 1
90201–127E1	19 – 10
90201–16026	31 – 28
90201–177G4	19 – 8
90201–20023	17 – 34
90201–20030	16 – 16
90201–20278	17 – 36
90201–220T0	25 – 7
90201–255A6	16 – 26
90202–05180	38 – 11
	38 – 33
90202–06004	37 – 34
90202–24190	25 – 2
90202–26142	25 – 5
90206–12005	19 – 20
90206–14086	36 – 16
90208–20001	16 – 17

PART NO.	REF. NO.
90209–08295	35 – 34
	35 – 61
90209–21332	17 – 4
90209–21351	17 – 10
90209–22352	17 – 9
90209–25342	17 – 21
90209–25349	17 – 26
90209–25350	17 – 27
90240–08005	36 – 18
90269–05074	20 – 18
90269–06008	21 – 30
	37 – 33
	38 – 12
	38 – 51
	38 – 54
90269–07001	21 – 25
90269–07007	20 – 11
90269–07008	22 – 25
90269–07010	21 – 14
90269–07076	22 – 6
	22 – 13
	23 – 16
90269–07077	22 – 14
90269–08001	23 – 19
90338–07043	28 – 6
	28 – 17
	38 – 16
	38 – 37
90338–07157	38 – 39
90338–08226	46 – 14
90340–14132	8 – 10
90340–20090	1 – 6
90340–32004	14 – 20
90386–14171	36 – 15
90387–05049	44 – 9
90387–06057	38 – 3
	38 – 24
90387–06068	27 – 5
90387–06091	28 – 24
90387–06130	22 – 16
	22 – 22
	23 – 13
	38 – 14
	38 – 35
90387–06133	23 – 9
90387–0614M	6 – 25
	6 – 26
90387–061W6	27 – 15

PART NO.	REF. NO.
90387–06205	9 – 21
90387–06232	21 – 26
90387–06299	27 – 19
90387–062L2	27 – 42
90387–06372	19 – 29
90387–064T3	37 – 50
	47 – 40
90387–065J6	21 – 2
90387–07391	37 – 42
90387–077M3	28 – 29
90387–08089	22 – 28
90387–1003G	35 – 62
90387–123X6	24 – 8
90387–2202V	17 – 30
90387–25024	16 – 20
90387–2504A	17 – 18
90387–2513E	17 – 7
90387–253M6	17 – 2
90387–2813C	17 – 19
90387–2813D	17 – 24
90401–10020	34 – 18
	36 – 24
90401–10038	34 – 19
90401–20145	8 – 6
90413–08012	10 – 35
90430–06014	5 – 8
90430–08119	1 – 9
90430–08143	14 – 21
90430–10005	34 – 20
	36 – 25
90430–10148	46 – 16
90430–10171	26 – 16
	26 – 36
90445–05003	37 – 21
90445–08025	6 – 43
90445–081F2	6 – 41
90445–106J2	27 – 28
	27 – 30
90445–11065	27 – 44
90445–12009	6 – 37
90445–12012	6 – 11
90450–22017	5 – 18
	6 – 35
90450–32003	6 – 6
	6 – 9
	6 – 14
	6 – 23
90450–32006	5 – 21

PART NO.	REF. NO.
90450–32006	6 – 13
	6 – 27
90450–35001	5 – 16
90450–38003	5 – 20
90450–53002	9 – 15
90450–63003	9 – 4
90464–07012	6 – 48
90464–10233	6 – 51
90464–13077	47 – 20
	47 – 21
90464–15065	46 – 26
90464–15157	37 – 25
	43 – 10
	43 – 14
90464–15195	47 – 25
90464–16003	36 – 22
90464–16005	27 – 27
90464–16006	25 – 21
	37 – 24
90464–16011	23 – 20
90464–18002	21 – 4
	34 – 24
90464–20010	47 – 22
	47 – 24
90464–20213	47 – 23
90464–23041	10 – 32
90464–24230	38 – 42
90464–25004	44 – 14
90464–31001	21 – 21
90464–34002	13 – 27
90465–08045	14 – 6
90465–10030	8 – 14
90465–10042	14 – 25
90465–14011	14 – 17
90465–15011	27 – 8
	47 – 34
90467–08075	6 – 44
	6 – 49
90467–090A2	27 – 29
	27 – 31
90467–10008	10 – 34
90467–10041	9 – 14
90467–100A1	27 – 31
	27 – 48
	27 – 52
90467–11044	36 – 11
90467–11090	6 – 12
	6 – 15

PART NO.	REF. NO.
90467–11090	6 – 36
	6 – 38
	10 – 25
90467–110A2	5 – 26
90467–14015	9 – 22
90467–15001	9 – 18
90467–17003	9 – 24
	11 – 8
90467–17089	11 – 3
	11 – 5
90467–17128	11 – 9
90467–200A0	6 – 34
90480–01558	37 – 27
	37 – 30
	38 – 21
	38 – 44
90480–07003	21 – 11
90480–08005	22 – 2
	22 – 8
90480–10334	22 – 17
	22 – 23
90480–12072	21 – 3
90480–12314	9 – 16
90480–13163	27 – 41
90480–14003	38 – 2
	38 – 23
90480–14004	37 – 41
90480–14016	28 – 27
90480–15363	6 – 24
90480–15M06	28 – 25
90480–16007	47 – 39
90480–16010	27 – 4
90480–18276	44 – 16
90480–23345	21 – 23
90501–12743	35 – 23
	35 – 48
90501–225A9	16 – 13
90506–15005	19 – 1
90506–23008	36 – 21
90506–23018	35 – 8
90508–18052	16 – 25
90508–20572	35 – 14
	35 – 39
90508–32020	19 – 5
90520–15002	47 – 13
91312–06016	46 – 22
91312–06020	1 – 21
	9 – 3

PART NO.	REF. NO.
91312–06020	19 – 15
91312–06025	8 – 13
	13 – 20
91312–06060	1 – 12
91312–06090	27 – 16
91312–08025	21 – 27
91312–08030	25 – 10
	25 – 17
91312–10025	26 – 43
91312–10035	20 – 7
91312–10045	20 – 8
91314–06030	14 – 5
91314–08040	26 – 41
91317–05010	27 – 25
91380–05008	43 – 16
91380–06012	47 – 19
91402–20012	36 – 20
91402–25015	35 – 16
	35 – 27
	35 – 41
	35 – 52
91701–08042	35 – 15
	35 – 26
	35 – 40
	35 – 51
91808–16023	1 – 7
91808–17032	7 – 2
92012–05025	46 – 6
92012–06012	28 – 9
92012–06020	23 – 14
92012–08020	22 – 27
92014–06010	12 – 9
92014–08014	14 – 22
92014–08020	35 – 58
92902–04100	34 – 14
92902–04600	21 – 44
	34 – 15
92902–08600	31 – 23
92907–06100	6 – 19
92907–06600	6 – 20
92907–10200	25 – 13
93101–12173	5 – 3
93102–12106	19 – 11
93102–12224	14 – 28
93102–25017	29 – 3
93102–25044	31 – 3
93102–35423	17 – 32
93106–22019	23 – 4

PART NO.	REF. NO.
93106–40041	31 – 13
93108–35004	23 – 6
93109–08061	14 – 29
	16 – 23
93109–18020	24 – 2
93210–04092	13 – 3
93210–06632	16 – 28
93210–06667	7 – 15
93210–09165	7 – 14
	13 – 24
93210–14003	7 – 10
93210–15566	8 – 8
93210–16325	13 – 22
93210–27194	14 – 12
93210–32172	14 – 19
93210–33133	5 – 10
93210–35N02	26 – 15
	26 – 35
93210–46001	5 – 22
93306–00106	5 – 2
93306–00304	16 – 12
93306–20331	29 – 2
93306–20483	17 – 14
	17 – 37
93306–20659	31 – 11
93306–30317	31 – 2
	31 – 4
93306–30525	17 – 13
93306–30550	17 – 17
93310–340N8	16 – 19
93317–11295	14 – 27
	19 – 16
93317–22262	23 – 3
93399–99931	25 – 1
93399–99932	26 – 44
93440–10153	1 – 4
93440–25186	17 – 5
93440–28062	17 – 22
93450–17129	2 – 8
93501–04011	35 – 24
	35 – 49
93511–32017	16 – 21
93607–44002	4 – 11
93608–17263	14 – 14
93900–00030	29 – 7
	31 – 8
94112–17102	29 – 6
94112–17103	29 – 6

PART NO.	REF. NO.
94116–17015	31 – 7
94116–17019	31 – 7
94580–25080	7 – 6
94582–24118	31 – 19
94591–68120	4 – 5
94701–00318	1 – 13
95022–06008	47 – 8
95022–06012	13 – 26
	36 – 31
95022–06014	14 – 31
95022–06025	40 – 9
95022–08012	1 – 8
95024–06020	5 – 7
95024–06030	21 – 6
95027–06020	45 – 5
95302–06600	16 – 31
95302–08600	31 – 22
95314–06700	19 – 25
95602–04100	21 – 45
95602–05100	21 – 18
	44 – 4
95602–05200	21 – 40
	46 – 7
	46 – 28
95602–06100	21 – 48
95602–10100	25 – 15
95602–10200	31 – 16
95607–06100	45 – 4
95612–08625	1 – 10
95612–12100	24 – 6
95617–06100	34 – 8
95702–06500	21 – 7
	21 – 33
	27 – 18
	28 – 4
	28 – 13
	37 – 48
	47 – 41
95702–08500	47 – 37
95802–06010	20 – 15
	27 – 51
95802–06012	21 – 13
	22 – 20
	25 – 20
	34 – 22
	36 – 28
	37 – 26
	37 – 29

PART NO.	REF. NO.
95802–06012	43 – 9
	43 – 13
95802–06014	38 – 18
	38 – 40
95802–06016	27 – 40
	47 – 43
95802–06025	6 – 29
95802–06030	6 – 30
95802–08016	27 – 49
95812–06030	7 – 3
95812–06045	13 – 13
95812–06055	13 – 9
95812–06065	13 – 12
95812–06100	13 – 14
95812–08065	13 – 10
95822–06010	21 – 15
95822–06012	6 – 32
95822–06014	38 – 46
95822–06025	37 – 45
95822–08020	20 – 3
95822–08035	37 – 44
95822–10020	6 – 47
95824–06016	12 – 7
95824–06020	12 – 6
97307–06012	6 – 18
97607–05255	45 – 15
97702–40010	41 – 4
	41 – 9
	41 – 14
	41 – 18
97702–50014	22 – 4
	22 – 10
97702–50016	37 – 14
	37 – 19
	43 – 6
	43 – 8
	43 – 12
97702–60525	46 – 13
97706–04012	44 – 3
98502–04012	21 – 43
	34 – 13
98507–04010	45 – 9
98507–05010	10 – 10
98507–05020	45 – 17
98507–05030	45 – 12
98507–05045	45 – 13
	45 – 16
98507–06012	10 – 11
98704–03020	45 – 8
98902–05012	9 – 20
98902–05020	9 – 8
99001–10600	19 – 13
99009–12400	5 – 9
99009–17400	19 – 9
99530–08012	14 – 3
99530–10014	13 – 4
99530–10114	1 – 24
99590–08012	14 – 32